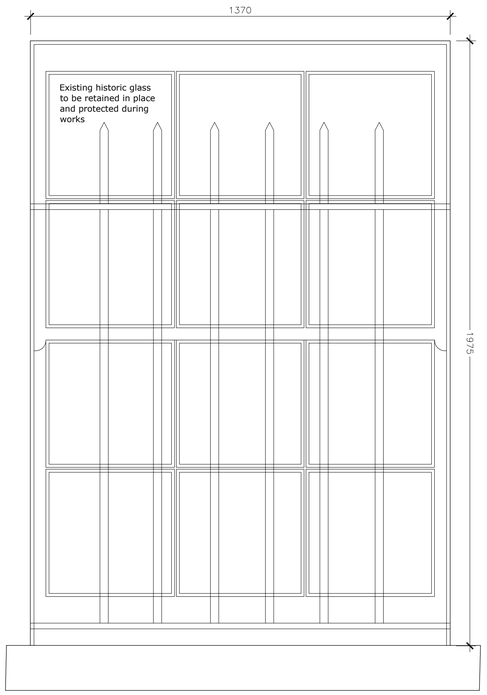

BLOCK B: WINDOW TYPE E (WD020)
scale 1:10

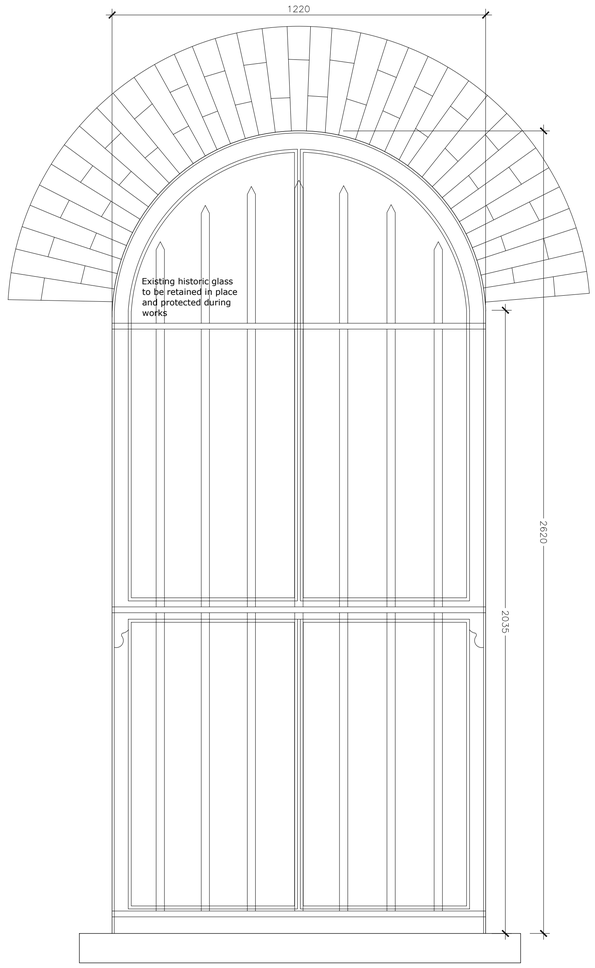

BLOCK B: WINDOW TYPE F (WD024)
scale 1:10

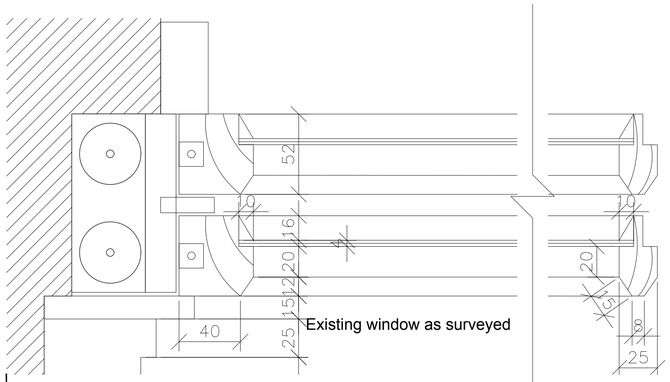

BLOCK B: EXISTING WINDOW TYPE E
scale 1:2

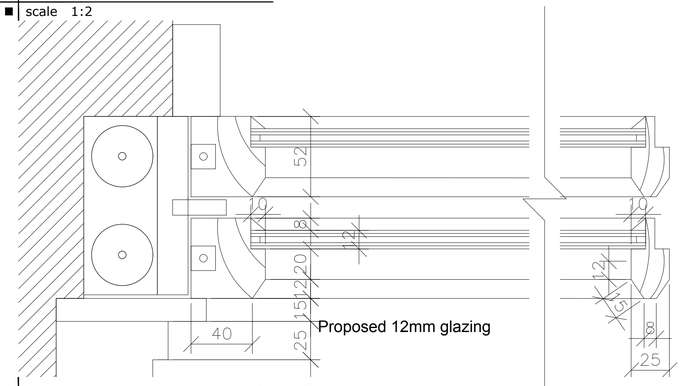

BLOCK B: PROPOSED WINDOW TYPE E
scale 1:2

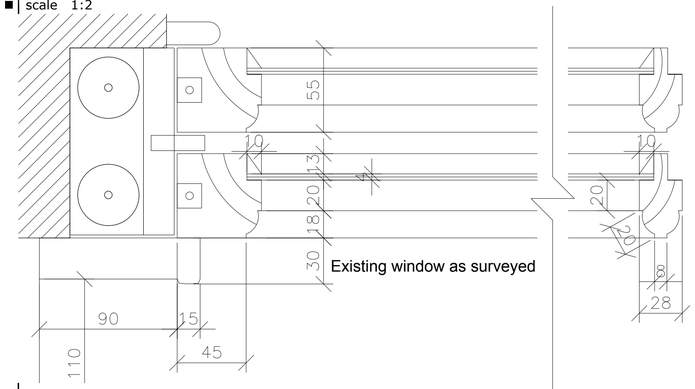

BLOCK B: EXISTING WINDOW TYPE F
scale 1:2

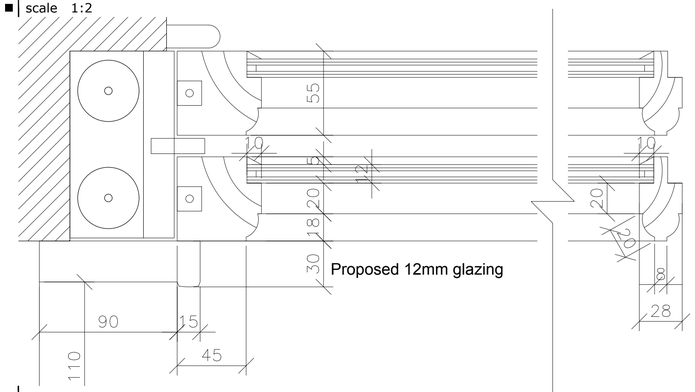

BLOCK B: PROPOSED WINDOW TYPE F
scale 1:2

Drawing Status
FURTHER INFORMATION
(Planning Reference SD22A/0153)
Date 18/04/2023
Issued By FKP

	DATE	INITIAL	NOTE
G			
H			
I			
J			
K			
L			

	DATE	INITIAL	NOTE
A			
B			
C			
D			
E			
F			

THIS DRAWING IS COPYRIGHT.
FIGURED DIMS. TO BE USED IN ALL CASES.

CAD FILE REF.
29-25-SV-500/DRAWING/FI

SCALE
1:10/2 @ A1

DRAWN BY
GK

CHECKED FOC

DATE
Sept 2022

JOB
1925
Gaelcholáiste an Phiarsaigh
Rathfarnham

CLIENT
Department of Education

TITLE
Window Details - Block B
Type E & F

DRAWING NUMBER
1925-SV-505

REVISION

Simon J Kelly Architects
21 Middle Street,
Galway
+353 91 56 29 49
Clare Yard,
Westport, Mayo
+353 98 24 414
mail@sjk.ie
www.sjk.ie

Fitzgerald Kavanagh + partners
architects
project managers

1 Mount Street Crescent, Dublin 2, D02 XF57, Ireland. Tel +353 1 676 4128 Fax +353 1 6618510 Email info@fkp.ie www.fkp.ie