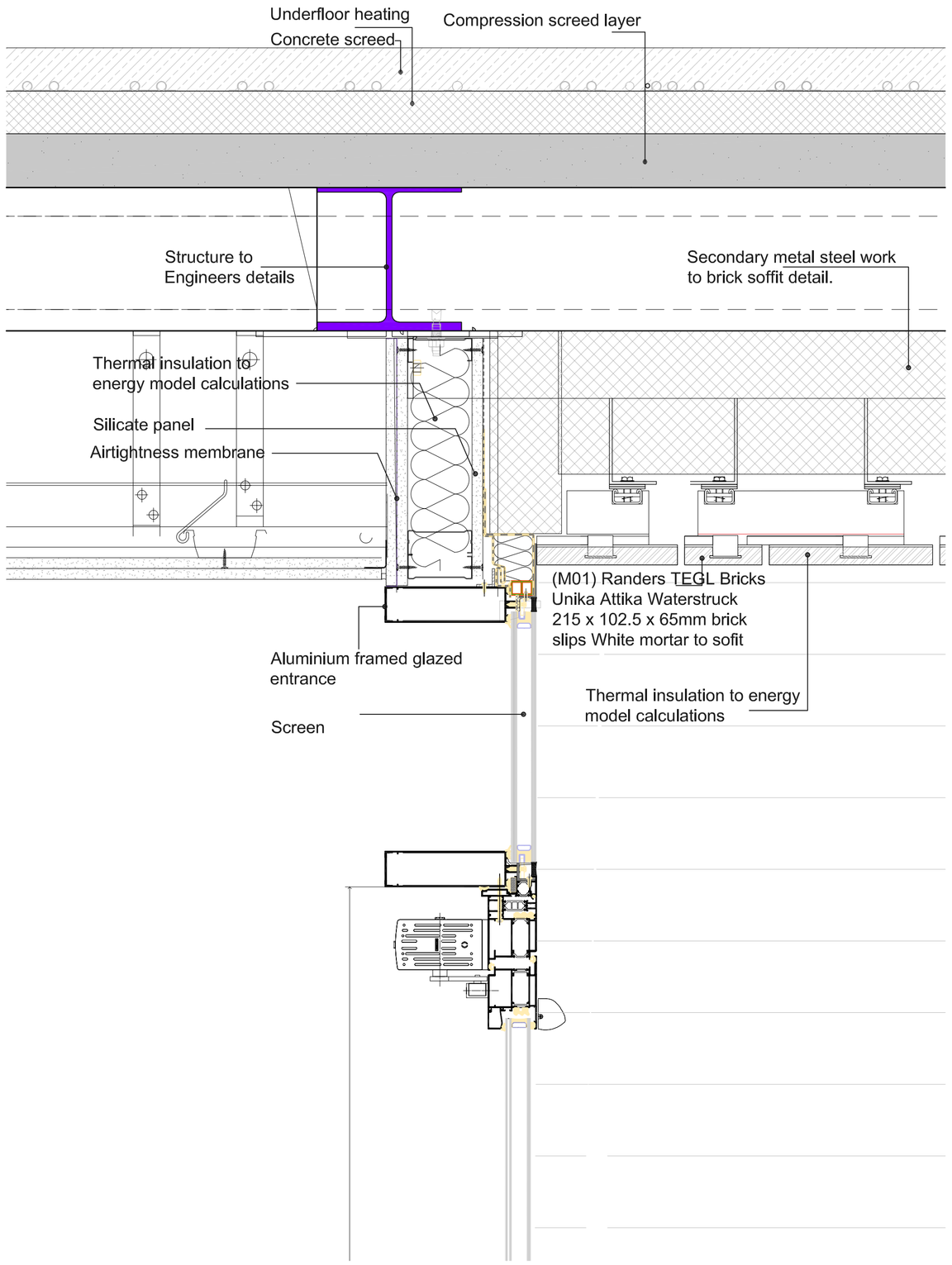


SECTION 262 DET 2 1/:5

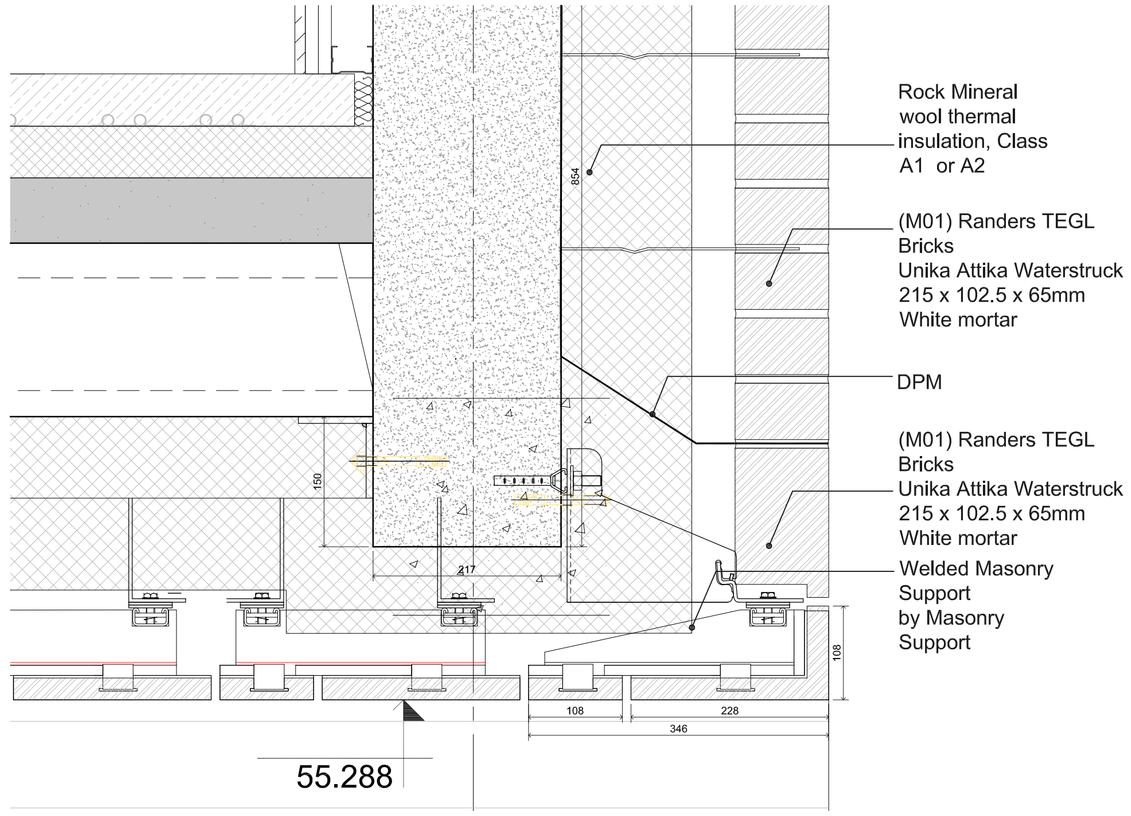


SECTION 262 DET 3 1/:5

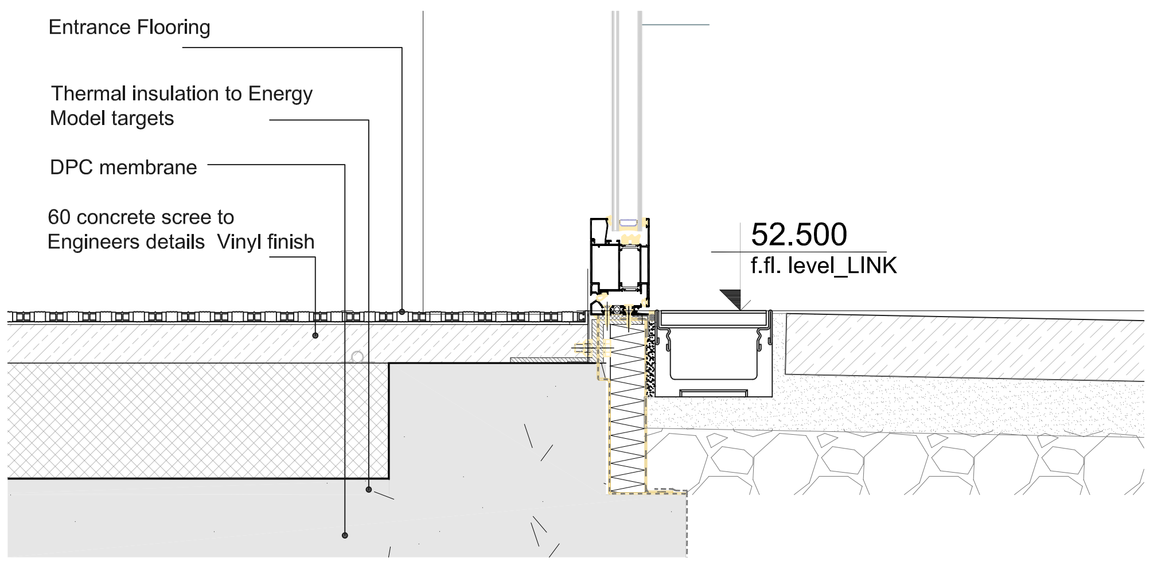


SECTION 262 DET 1 1/:5

**NOTE: Details provided in response to planning RFI Item 2 "The applicant is to submit detailed drawings and CGIs of the proposed glazed link, from all sides". Should planning permission be granted, details to be further developed for tender and construction stages**

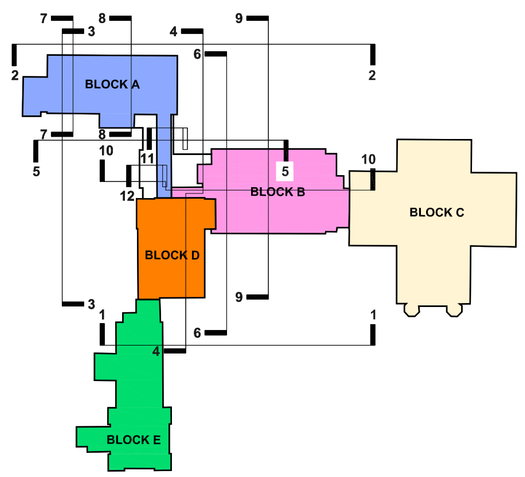


KEY PLAN

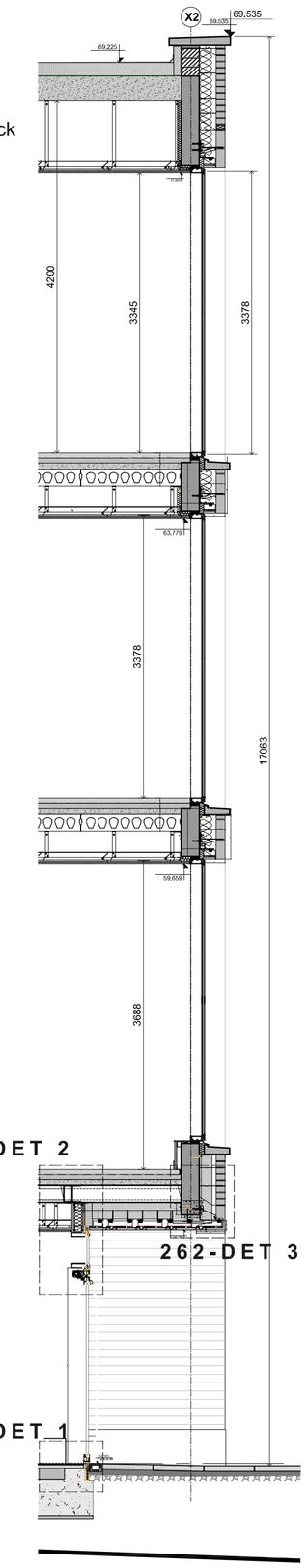


262-DET 2

262-DET 3

262-DET 1

KEY SECTION CALL OUT- 1:50

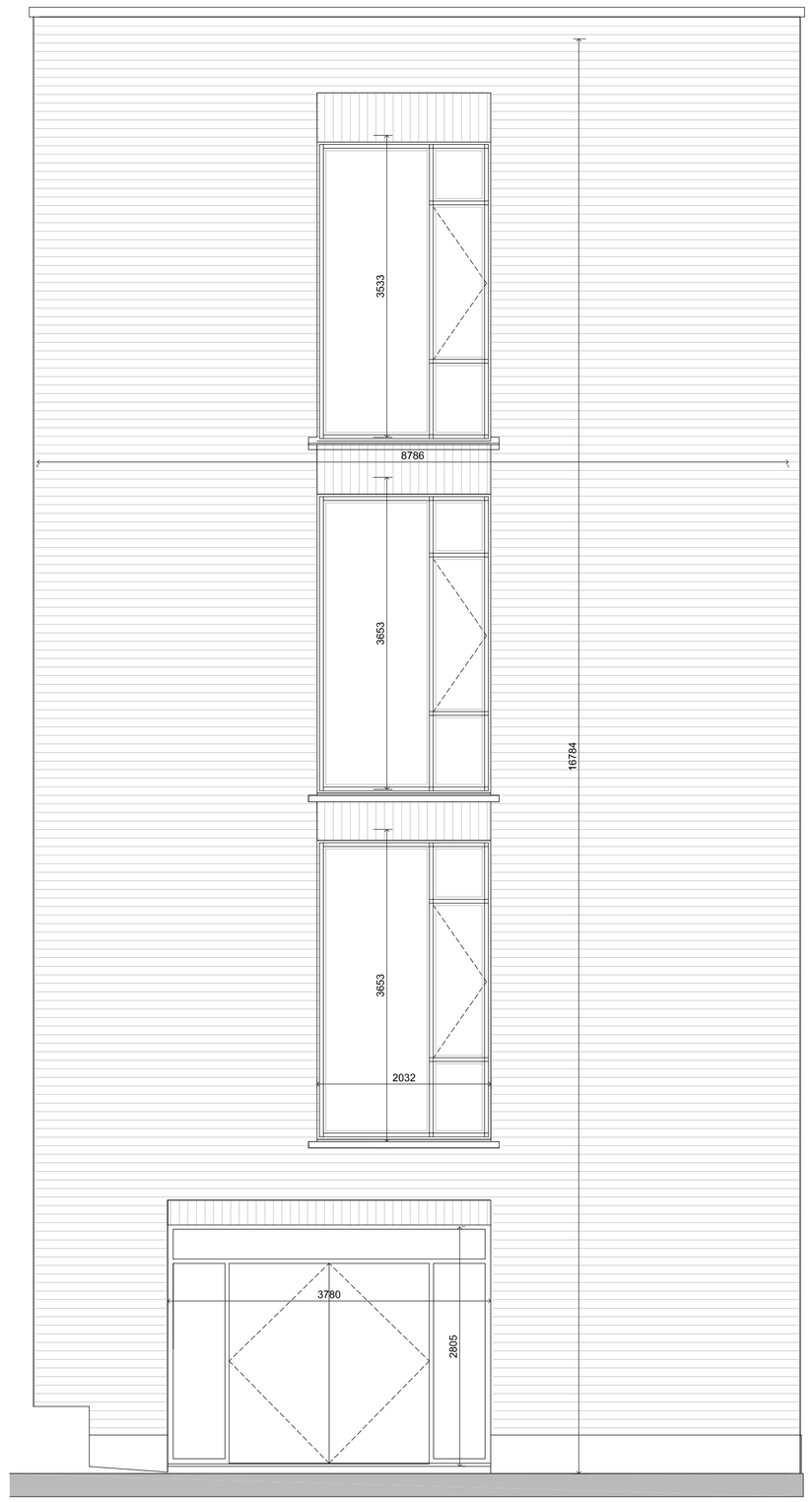


KEY ELEVATION - CALL OUT- 1:200


**Conditions of use of this drawing**

note: if this A1 size drawing is reproduced at a smaller size which makes these conditions difficult to read, please contact the Architects office for a legible copy of these conditions.

1. This drawing the design and contents contained herein are copyright. all rights are reserved. No part hereof may be copied or reproduced partially or wholly in any form whatsoever without the prior written consent of the copyright owners Simon J Kelly Architects.
2. This drawing is to be relied upon only for the specific project and for the specific purpose for which it has been prepared. This drawing is not to be relied upon for construction purposes, and no implied or expressed warranty is given as to the suitability for construction purposes, unless the purpose of this drawing is stated to be "construction" or "contract". If the purpose is stated to be "contract" this drawing is not to be used for construction if it is also marked "preliminary".
3. The Employer is granted a copyright licence to use this drawing and its contents for the purpose for which the drawing has been prepared. If this drawing has been produced for construction purposes the licence will only be valid for a single constructed reproduction and shall expire once a single reproduction has occurred. Any such licence only passes to the Employer on payment of Architects fees in full and in any event the licence cannot be assigned without prior written consent of Simon J Kelly Architects.
4. Where the Architects conditions of engagement provide that the Employer obtains copyright (whether by transfer of ownership or expressed or implied licences) for use on projects other than the project which the copyright material was specifically prepared for, the Architect does not accept any liability whatsoever howsoever arising for use of this drawing and or its contents (in whole or in part) in relation to any project and or purpose other than that for which it was specifically prepared. A copyright entitlement to use this drawing and or its contents (in whole or in part) is not a warranty that use of this drawing and or its contents (in whole or in part) is appropriate in circumstances other than the purpose and project for which it has been prepared.
5. Do not scale off this drawing. Figured metric dimensions only should be taken off this drawing. Imperial dimensions, if any, contained on this drawing are given for illustrative purposes only.
6. All contractors, whether main or sub contractors, must visit the site and are responsible for taking and checking any and all dimensions levels and the like that relate to the works.
7. Where this drawing contains discrepancies in relation to other relevant documents, such discrepancies shall be brought to the attention of the Architects who shall issue a written instruction as to which information is to be followed, and until such written Architects Instruction has been issued any work carried out on foot of the discrepancies shall be unauthorised.
8. References to National Standards, whether to Irish (IS) British (BS) or otherwise, or codes of practice (CP) shall be deemed to refer to the relevant standard or code current at the date of issue of the drawing notwithstanding any reference to the contrary or to any earlier standard.
9. Any reference to the "Architect" or "Architects" on this or any other relevant document shall mean the nominated project Architect and or a Director of Simon J Kelly Architects who has been nominated as the partner-in-charge but only while such Architect remains in the employment of Simon J Kelly Architects.
10. Any questions as to the meaning or application of these conditions shall be submitted in writing to the Architect for his/her ruling and such a ruling shall be conclusive as to the meaning or application of these conditions.
11. Simon J Kelly Architects, their Agents, Architects, employees and or directors shall not be liable for any loss damage or injury consequential or otherwise howsoever arising for failure to comply with any or all of these conditions.
12. Should anyone copy this drawing in whole or in part with or without consent and use the copy in relation to a purpose and or project for which the drawing has not been prepared for, such use is at the sole and exclusive risk of the copier and Simon J Kelly Architects do not accept any liability whatsoever howsoever arising in relation to such use.
13. Should anyone copy this drawing in whole or in part with or without consent they should also copy these conditions of use in full and reproduce them with the copy. These conditions of use are to be read in conjunction with the drawing and its contents, these conditions of use from part of this drawing and or its content and are inseparable from this drawing and or its content.
14. The use of or reliance upon this drawing and or its contents shall be deemed to be acceptance of these conditions of use unless otherwise agreed in writing, such written agreement to be sought from and issued by the Architects prior to the use or reliance upon this drawing and or its contents.
15. All drawings are to be read in conjunction with the fire safety compliance report, all other contract documents, all statutory consents and or requirements and all statutory obligations.


RFI Response

| rev. | date | description | by |
|---|---|---|---|

PROJECT: Gaelcholáiste an Phiarsaigh - Loreto Abbey, Rathfarnham

CLIENT: Department of Education / Board of Management

DRAWING: General Arrangement Section 12 - Details 3

| DRAWING PURPOSE: | DRAWN BY: | APPROVED: | DATE: |
|---|---|---|---|
| RFI Response | | SR | April 2023 |
| DRAWING SIZE: A1 | SCALE: 1/100 | DRAWING REFERENCE: 2350-SJK_RFI_S2B_S_200_E262 | REV. NO. Rev 00 |


Fitzgerald Kavanagh + Partners
1 Mount Street Crescent, Dublin 2, D02 XF57
+353 1 676 4128
info@fkp.ie
www.fkp.ie

Simon J Kelly Architects
21 Middle Street, Galway
+353 91 56 2949
Cox's Yard, Westport, Mayo
+353 98 24 414
mail@sjk.ie
www.sjk.ie