1 Informal play item, tree trunk

2 Informal play item, boulder

3 Outdoor Gym equipment, Trinity Cycle, set in tigermulch

4 Informal Kickabout space

5 Play area information board, with details of the age profile per play item and emergency contact details

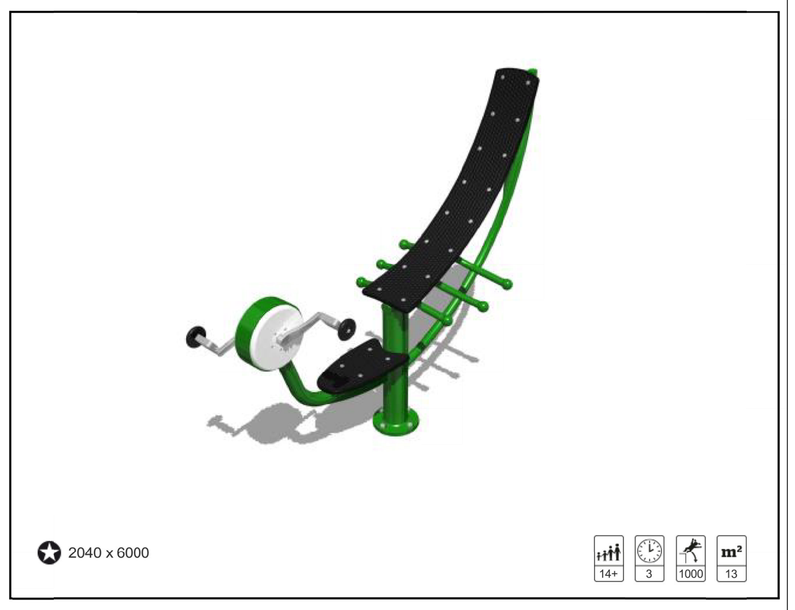

Trinity Cycle

8050386 CC Green – Cast In Place

Play Values

HAGS

3 Outdoor Gym equipment, Trinity Cycle, set in tigermulch

1 - 4m long seasoned hardwood logs with all branches removed

2 Large boulders to be placed flat-side up to enable play

4 Informal kickabout space

Tiger mulch to base of outdoor gym and formal playground equipment

Note 1:
All play equipment to conform to EN 1176-1-11 and 1177 Playground Equipment and surfacing

Note 2:
Surface finished with engineered woodchip conforming to BS EN 1177 Impact attenuating surfacing

Rev.	Date	Note
00	0000-00-00	00

North

General Notes

Doyle & O'Troithigh Landscape Architecture

Project Name	Tandy's Lane Village Phase 2	Drawing Name	Playground Plan 3 of 3
Status	Compliance	Drawing No	PG-03-CO
Project No	19-044	Revision No	00
Scale	1:200	Drawn By	KGR
Date	29/08/2022	Checked By	DOT

Linda Doyle
Director
+353 (0)87 267 4196
lindad@doyle-otroithigh.com

Daithi O'Troithigh
Director
+353 (0)86 300 3499
daithi@doyle-otroithigh.com

Office Address
Pembroke House
28-23 Upper Pembroke St
Dublin 2

Contact
mail@doyle-otroithigh.com
+353 (0)1 608 7782