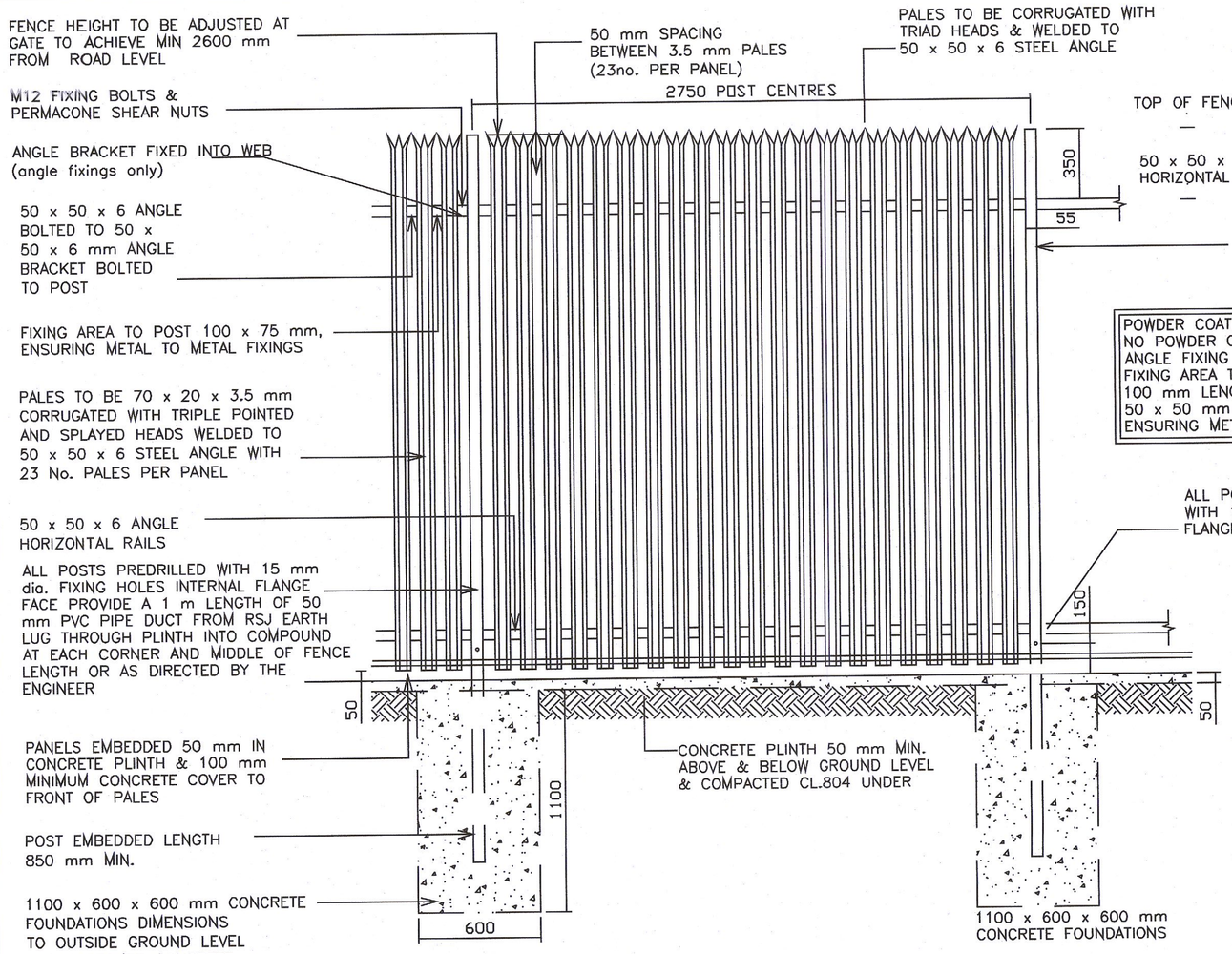

ELEVATION OF FENCE

POWDER COATED GALVANISED FENCE:
NO POWDER COATING TO:
ANGLE FIXING BRACKET,
FIXING AREA TO POST 100 x 75 mm,
100 mm LENGTH OF ANGLE TO PANELS
50 x 50 mm AREA AT PREDRILLED HOLES
ENSURING METAL TO METAL FIXINGS

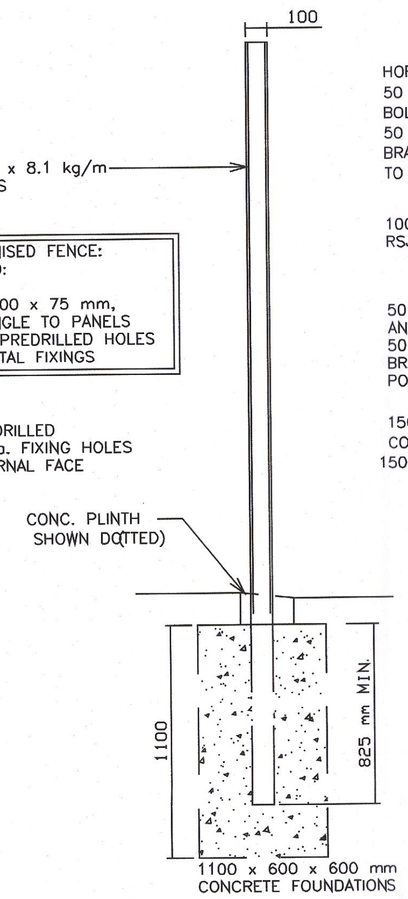

SIDE ELEVATION OF POST

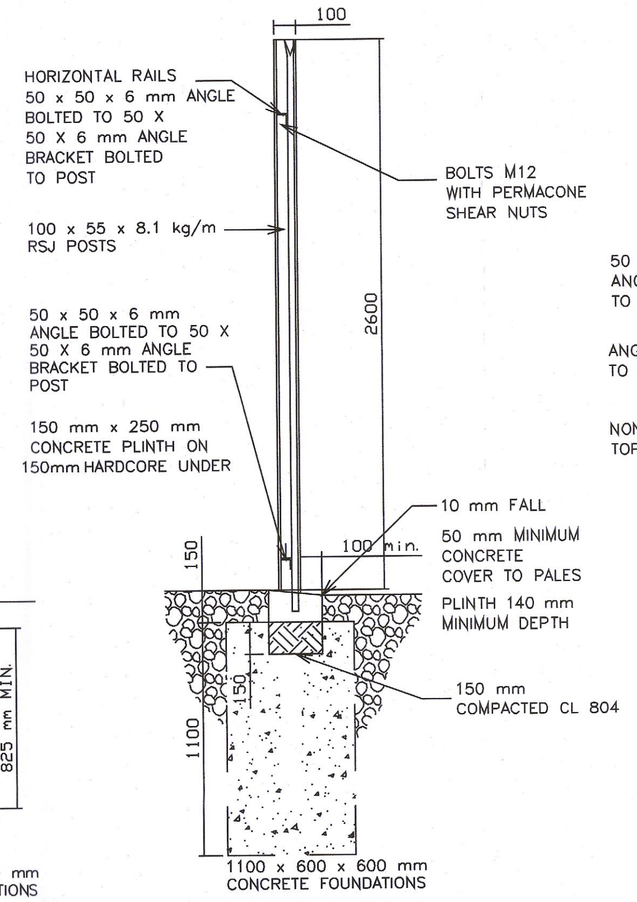

PALES & PLINTH DETAILS

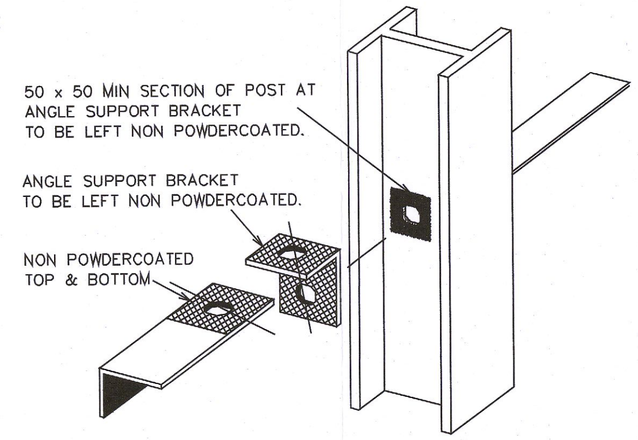

DETAIL OF COATING AT FIXING POINTS

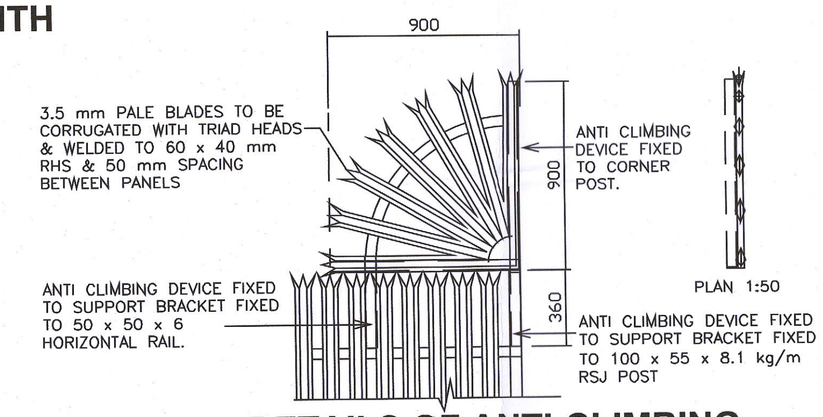

DETAILS OF ANTI-CLIMBING AID (WHERE APPLICABLE)

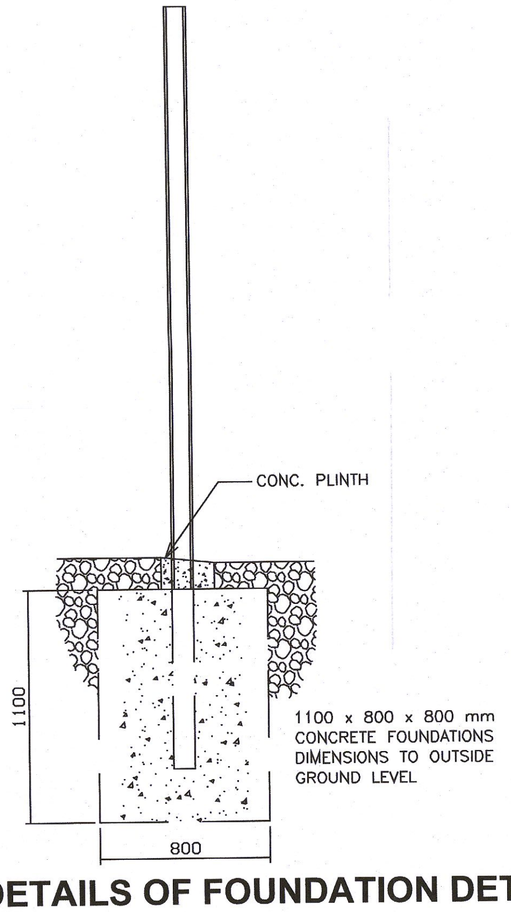

DETAILS OF FOUNDATION TO CORNER POST

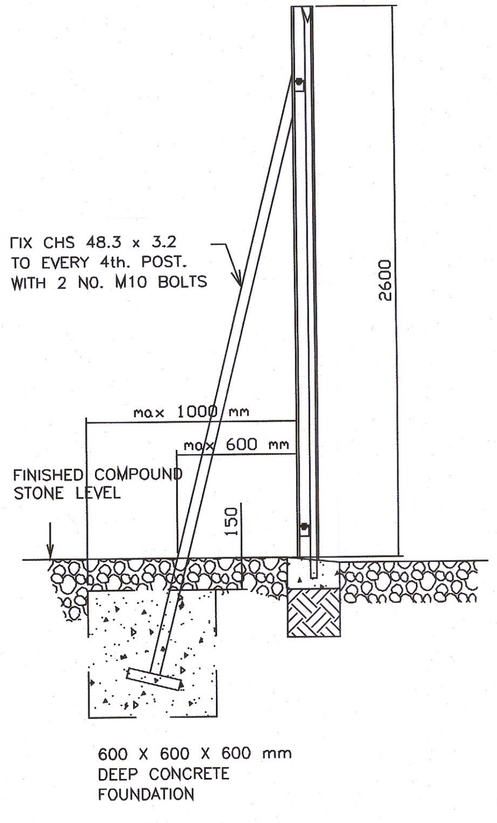

DETAIL OF STRUTS TO FENCING (WHERE REQUIRED)

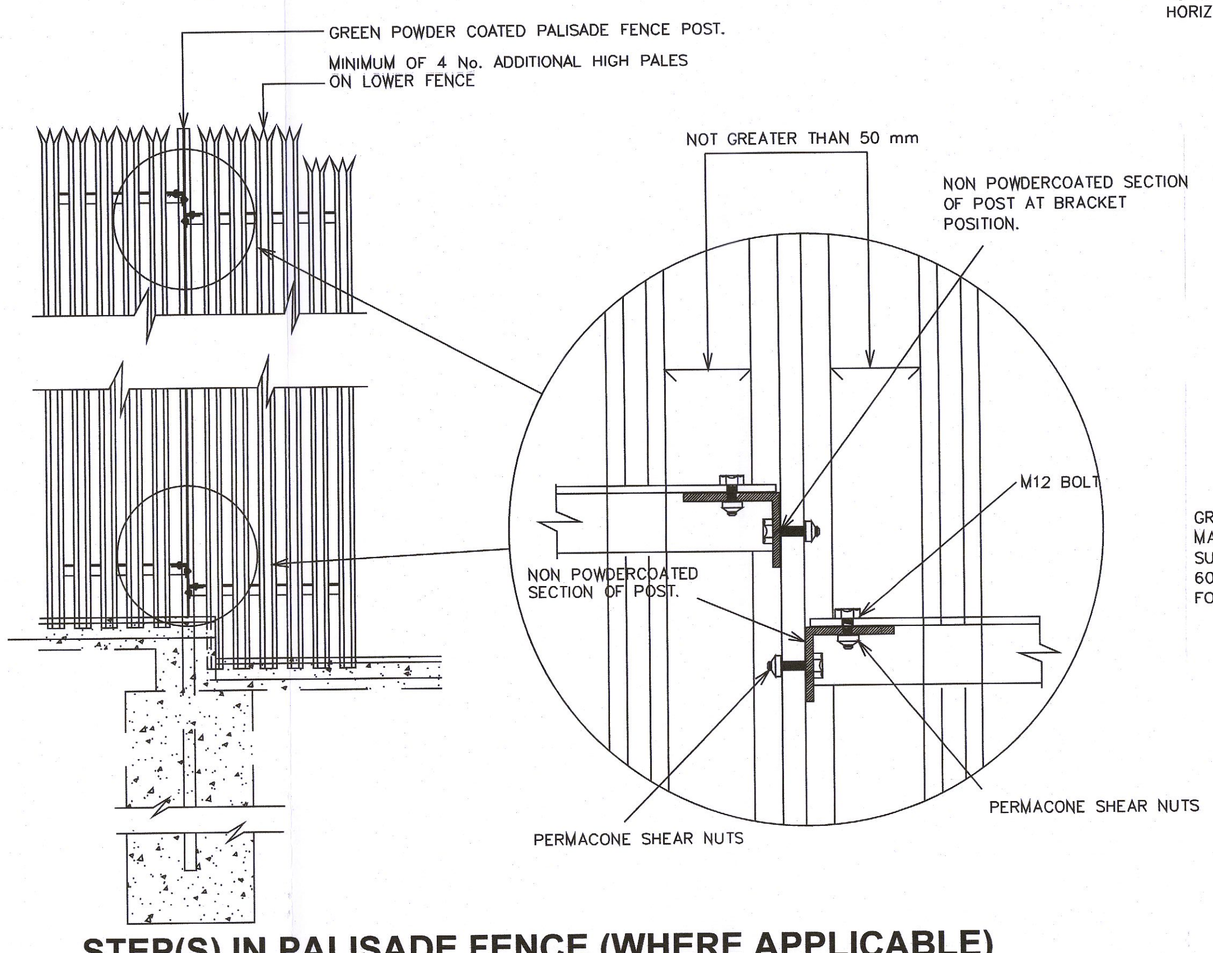

STEP(S) IN PALISADE FENCE (WHERE APPLICABLE)

DEPTH OF STEP TO BE AGREED ON SITE, BUT NOT GREATER THAN 200 mm
NOTE:– ADDITIONAL HIGH PALES ON LOWER FENCE.

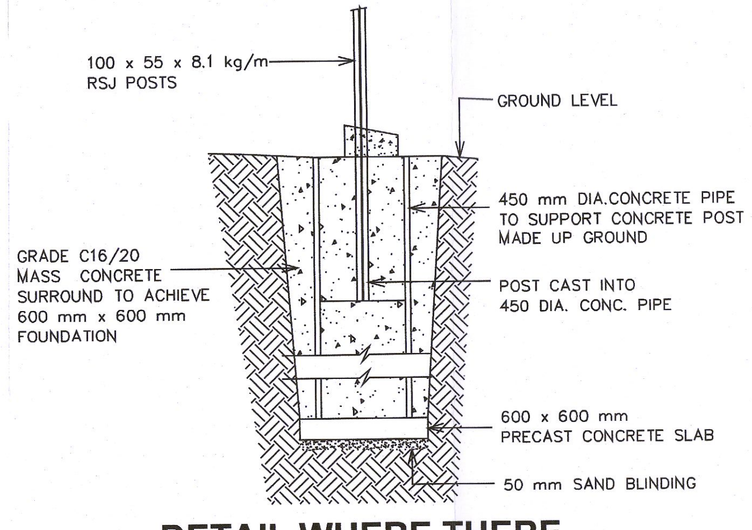

DETAIL WHERE THERE IS MADE-UP GROUND

KEY PLAN

NOTES / LEGEND

NOTES

1.) GALVANISING TO BE IN ACCORDANCE WITH I.S. EN ISO 1461.

2.) POWDER COATING TO BE IN ACCORDANCE WITH I.S. EN 13438.

3.) PALES TO BE TRIPLE POINTED & SPLAYED, AND WELDED TO RAILS IN ACCORDANCE WITH CL. 5.1 OF BS 1722

4.) GAP BETWEEN PALES AND BETWEEN PALES AND RSJ TO BE NOT GREATER THAT 50 mm.

5.) MINIMUM HEIGHT OF FENCE ON EITHER SIDE OF COMPOUND IS TO BE 2600 mm

6.) IN AREAS OF MADE-UP GROUND ADDITIONAL CONCRETE TO BE USED IN BASE. QUANTITY TO BE APPROVED BY THE ENGINEER IN ADVANCE.

7.) CONCRETE TO BE GRADE C30/37 TO BASES.

8.) PALISADE FENCE TO HAVE GREEN POWDER COATING IN ACCORDANCE 5. WITH I.S. EN 13438. COLOUR; MOSS GREEN RAL 6005.

9.) PALISADE FENCE TO BE CONSTRUCTED IN ACCORDANCE WITH B.S. 1722 PART 12.

RKD Reviewed and Approved for Planning Submission

READ IN CONJUNCTION WITH THE FOLLOWING DRAWING'S AND DOCUMENT'S

Doc.No.	Title

DRAWING STATUS

FOR PLANNING

REV	DESCRIPTION	DATE	BY	CKD
*	*	*	*	*
*	*	*	*	*
*	*	*	*	*
*	*	*	*	*
*	*	*	*	*
B	ISSUED FOR PLANNING	15/07/2022	EC	EOK
A	ISSUED FOR PLANNING	17/06/2022	EC	EOK

PROJECT
DATA CENTRE

TITLE
DETAILS:
TYPICAL PALISADE FENCE

kirby engineering & construction

London Office: PROFILE WEST 950 GREAT WEST ROAD BRENTFORD TW8 9ES TEL: +44(0)20 82327510 FAX: +44(0)20 82327511 Email: ukinfo@kirbygroup.co.uk

Limerick Office: RAVEEN BUSINESS PARK LIMERICK TEL: +353 (0)61 226060 FAX: +353 (0)61 226061 Email: limerick@kirbygroup.ie

Dublin Office: SHITE SIBAN BUSINESS PARK SOUTH CIRCULAR ROAD DUBLIN TEL: +353 (0)1 4640411 FAX: +353 (0)1 4647689 Email: dublin@kirbygroup.ie

Galway Office: MONKEA ROAD BALLYGAVE GALWAY TEL: +353 (0)91 752860 FAX: +353 (0)91 752862 Email: galway@kirbygroup.ie

DRN: EC	CKD: EOK	JOB NO: IE0161
DATE: 15/07/2022		REV NO: B
SCALE 1:20 (A1)		CAD:

DWG NO: KG-IE0161-CD022