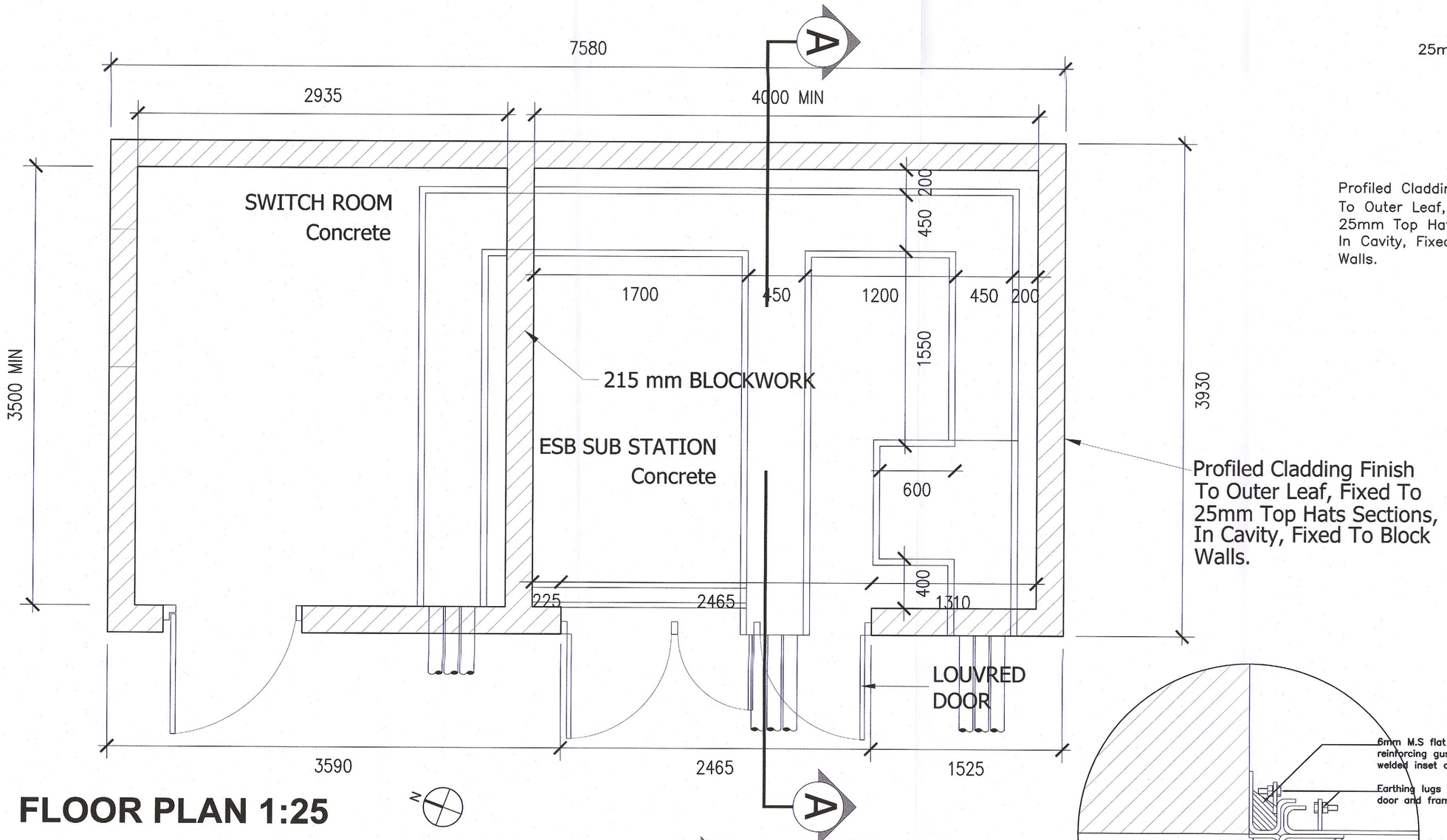

Profiled Cladding Finish To Outer Leaf, Fixed To 25mm Top Hats Sections, In Cavity, Fixed To Block Walls.

FLOOR PLAN 1:25

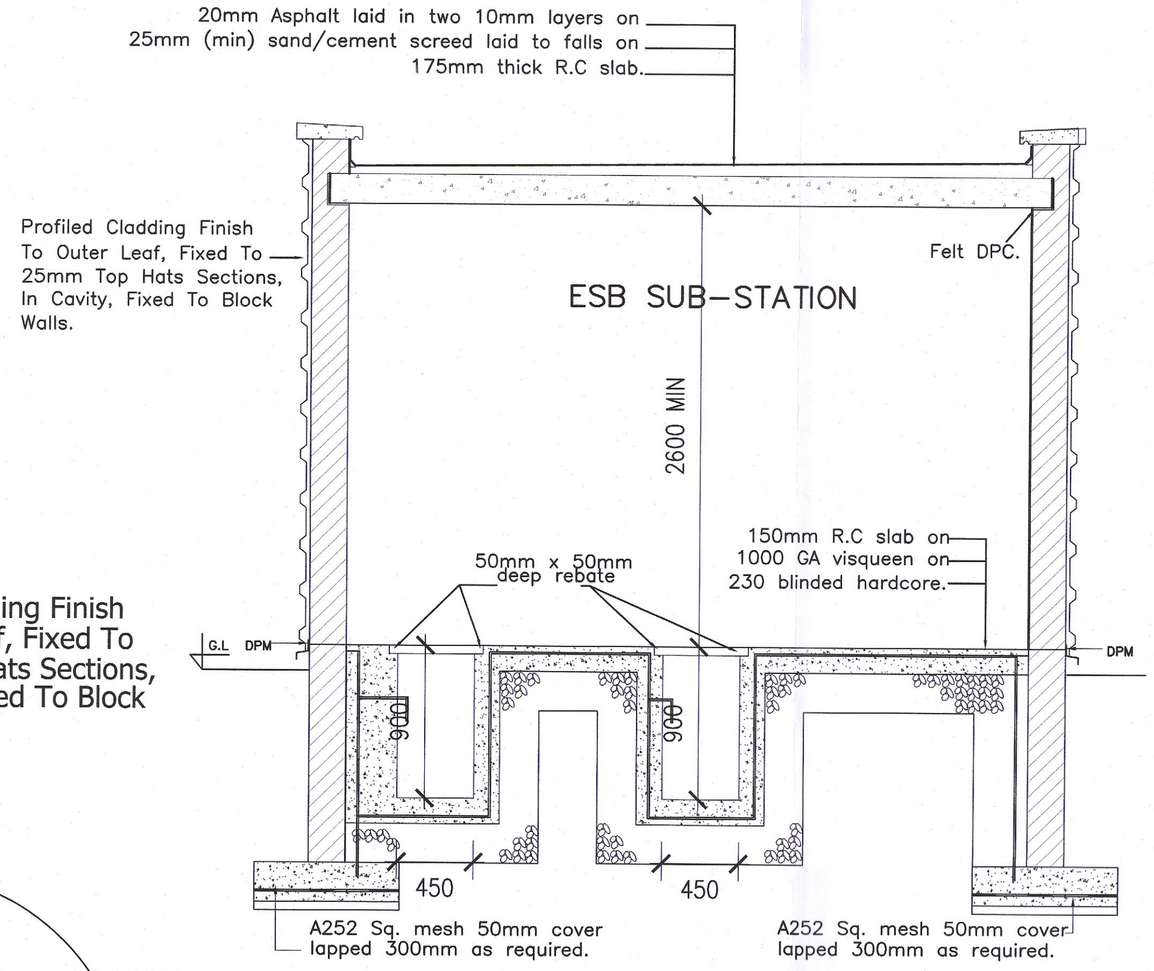

SECTION AA 1:25

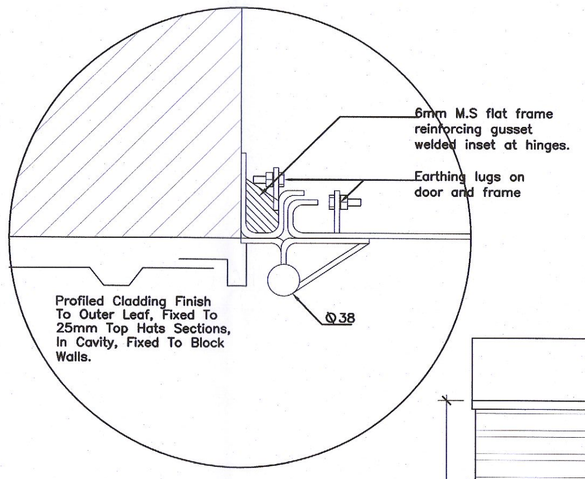

DOOR JAMB DETAIL

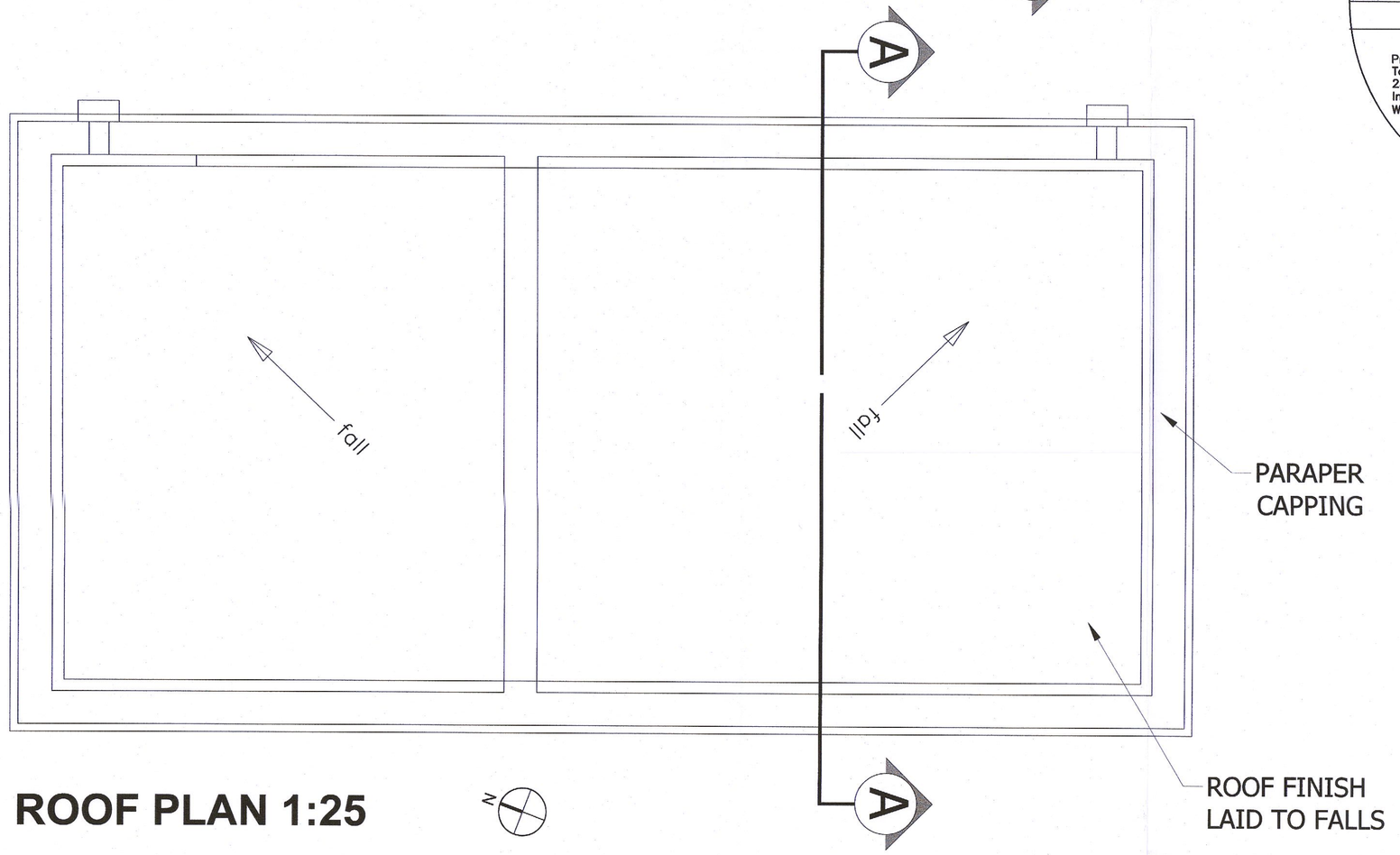

ROOF PLAN 1:25

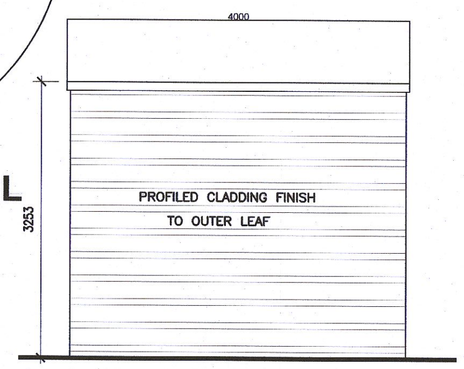

NORTH ELEVATION side 1:50

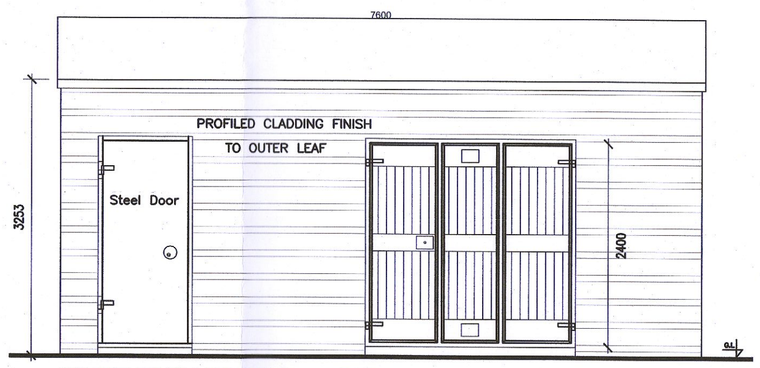

WEST ELEVATION front 1:50

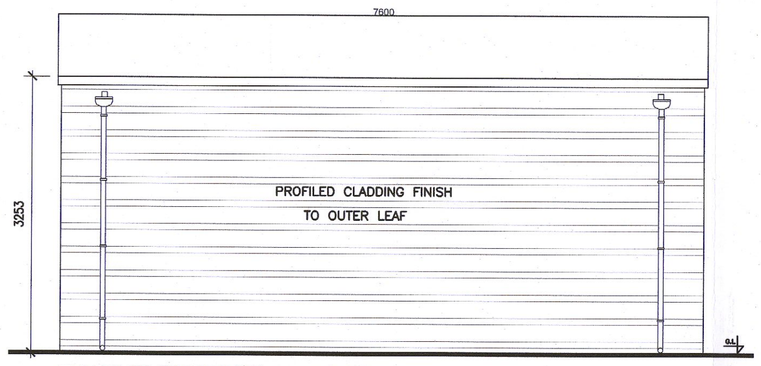

EAST ELEVATION rear 1:50

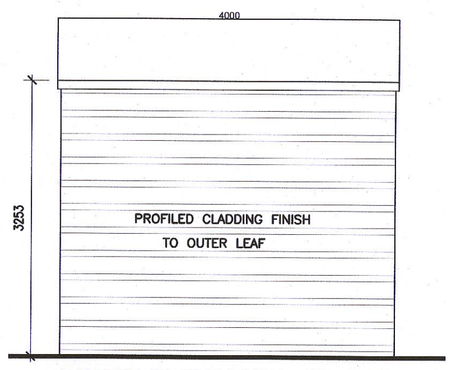

SOUTH ELEVATION side 1:50

A1

All dimensions to be checked on site. Figured dimensions take preference over scaled dimensions. Any errors or discrepancies to be reported to the Architects. This drawing may not be edited or modified by the recipient.

Copyright and ownership of this drawing is vested in RKD Architects, whose prior written consent is required for its use, reproduction or for publication to any third party. All rights reserved by the law of copyright and by international copyright conventions are reserved to RKD Architects and may be protected by court proceedings for damages and/or injunctions and costs. RKD Architects' Quality Management Systems are independently certified to ISO 9001:2015.

Notes

PERMITTED DRAWING UNDER PLANNING REFERENCE SD18A/0301, PREVIOUS DRAWING REFERENCE PA0012 REV A

REV	DATE	CHK BY	DESCRIPTION
P1	18/07/22	DH	ISSUED FOR PLANNING

K2 DATA CENTRES

STATUS: PLANNING

PROJECT: K2 Datacentre

PROJECT ADDRESS: Unit 4070 Kingswood Road, Citywest Business Campus

DWG TITLE: Permitted 10kV Sub Station

DWG NO: 21174-RKD-ZZ-ZZ-DR-A-2400

REV	PROJECT NO	SCALE
P1	21174	Varies

DATE	DRN	CHK
18/07/22	RCD	DH

RKD
59 Northumberland Rd
Ballsbridge, Dublin 4
D04 WP89, Ireland
+353 1 668 1055
mail@rkd.ie
rkd.ie