DRAWING IS PRODUCED USING THE IRISH TRANSVERSE MERCATOR (ITM) GEOGRAPHIC COORDINATE SYSTEM

A1

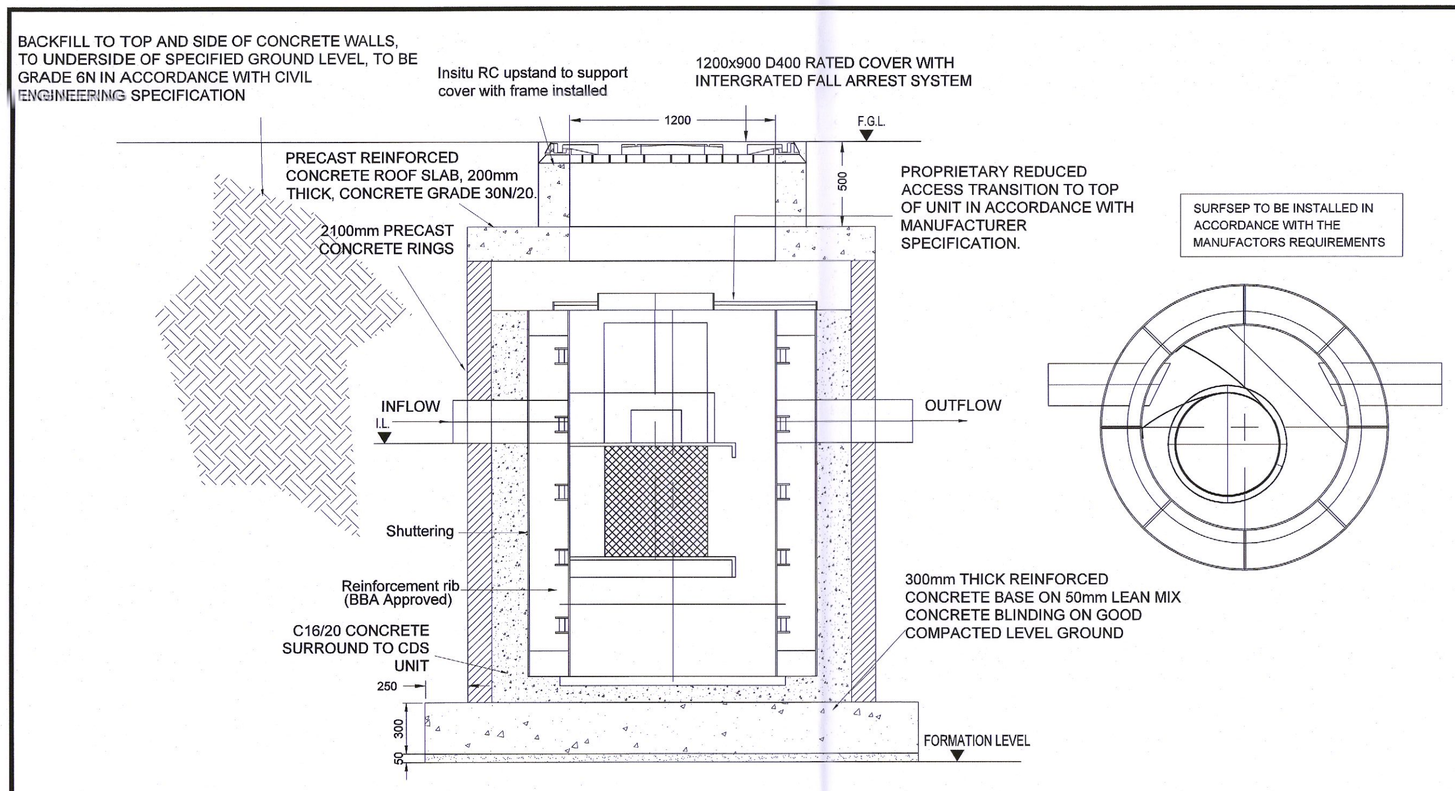

PROPOSED "SURFSEP" UNIT MANHOLE TYPICAL DETAILS

SCALE 1:25

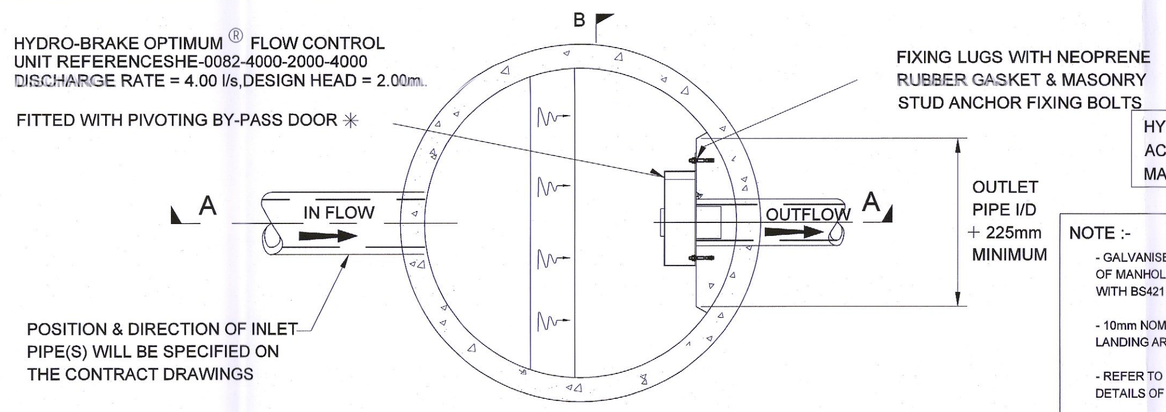

HYDROBRAKE TO BE INSTALLED IN ACCORDANCE WITH THE MANUFACTORS REQUIREMENTS

NOTE :-

- GALVANISED LADDER MOUNTED ON WALL OF MANHOLE BELOW COVER TO COMPLY WITH BS4211.
- 10mm NOMINAL SAFTEY CHAIN TO EDGE OF LANDING AREA TO COMPLY WITH BS4942.
- REFER TO NRA DRAWING RCD/500/11 FOR DETAILS OF LADDERS & CHAINS.
- THIS DRAWING SHALL BE READ IN CONJUNCTION WITH ALL OTHER RELEVANT (eg.CIVIL) DRAWINGS AND SPECIFICATIONS.
- ALL DIMENSIONS IN MILLIMETRES UNLESS OTHERWISE STATED
- PENSTOCK VALVE TO BE INSTALLED IN IN HYDROBRAKE MANHOLE

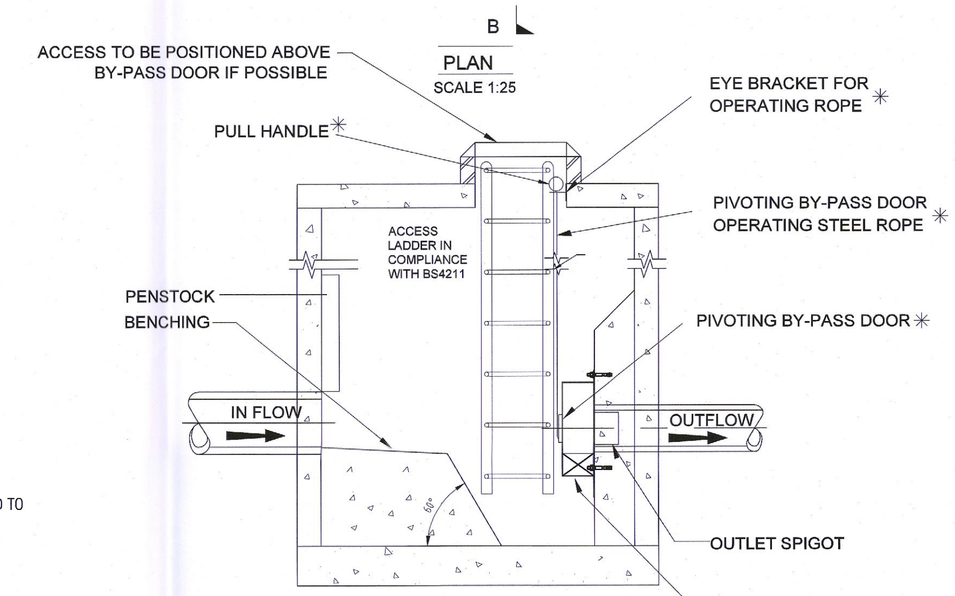

SECTION A-A

SCALE 1:25

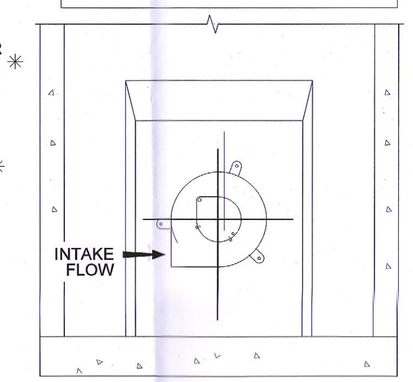

SECTION B-B

SCALE 1:25

PROPOSED "HYDROBRAKE OPTIMUM" UNIT MANHOLE DETAILS

SCALE 1:25

GENERAL NOTES

1. ROCK IN TRENCHES SHALL BE EXCAVATED AND TRIMMED TO UNDERSIDE LEVEL OF PIPE BED
2. GRANULAR MATERIAL CLASS 'B' TO BE USED FOR BEDDING AND HAUNCHING
3. CONCRETE MIX C25/20 TO BE USED FOR BEDDING, HAUNCHING AND SURROUND
4. SEE TABLE 'A' FOR CONCRETE BED WIDTHS
5. WHERE FLEXIBLE JOINTS ARE USED, VERTICAL MOVEMENT JOINTS SHALL BE PROVIDED IN THE BED AT MAX INTERVALS OF 5M AND ALIGNED WITH THE FACE OF PIPE SOCKET. JOINTS TO BE 12mm WIDE AND FILLED WITH FLEXCELL OR SIMILAR IN THE CONCRETE BED AND SURROUND.
6. GRANULAR BEDS TO DRAINS SEE TABLE 'B'.
7. IF COVER TO PIPE IS LESS THAN 1.2M IN ROADS AND DRIVEWAYS 0.9M IN OPEN SPACES AND PATHS NOT NEAR CARRIAGEWAYS SURFACE WATER AND FOUL DRAINS SHALL BE SURROUNDED BY 150 THK C25 CONCRETE
8. ALL CONCRETE TO BE MIX C25.
9. WHERE PVC PIPES ARE ENCASED IN CONCRETE, THEY SHALL BE FIRST WRAPPED IN VISQUEEN 1000.
10. ALL SERVICES TO HAVE MARKER TAPE LAID OVER FULL WIDTH OF SERVICE MINIMUM 400mm BELOW FINISHED SURFACE LEVEL.

TRENCH: MINIMUM WIDTH TO BE PIPE Ø +300mm
MAXIMUM WIDTH TO BE PIPE Ø + 600mm

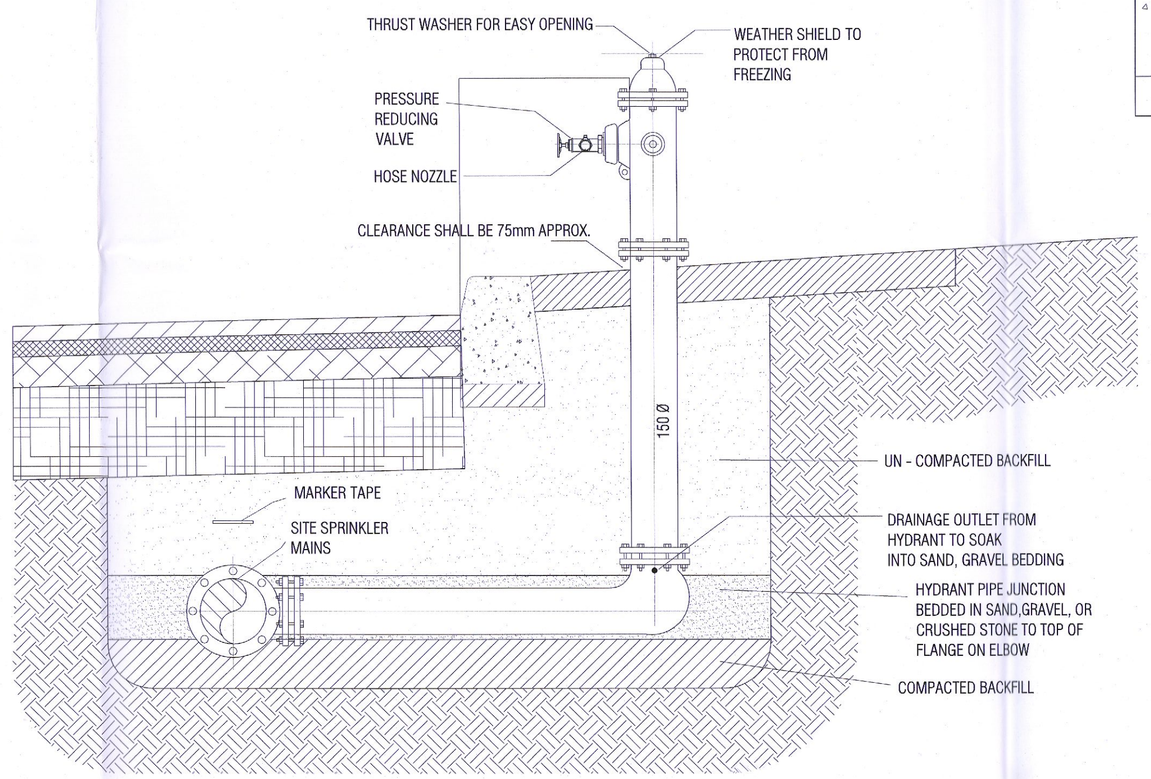

TYPICAL HYDRANT CROSS SECTION

Scale NTS

NOTES:

1. ALL DIMENSIONS ARE IN MILLIMETRES
2. WHERE THE ROAD IS ON EMBANKMENT SWALES SHOULD BE POSITIONED AT THE TOE OF THE EMBANKMENT SO THAT WATER WILL NOT BE INTRODUCED INTO THE EMBANKMENT
3. SWALES MAYBE ALLOWED TO ENCROACH IN TO MAINTENANCE STRIP WHERE PROVIDED.
4. CHECK DAMS MAYBE REQUIRED TO LIMIT VELOCITIES DURING EXTREME, EVENTS TO 1-2m/s. LONGITUDINAL SLOPE SHOULD BE MINIMUM 1 IN 300 AND MAXIMUM 1 IN 40, UNLESS CHECK DAMS ARE USED.
5. FOR DETAILS OF GRASS AND REED TYPES TO BE USED REFER TO CIRIA GUIDE C697 - THE SUDS MANUAL.
6. SWALE SURFACE FINISH WITHIN SUBSTATION COMPOUND TO BE GRAVEL. SLOPES TO HAVE BEDPAVE 40 TO RETAIN GRAVEL ON SLOPE.

TYPICAL SWALE DETAIL RCD/500/35.

TRENCH: MINIMUM WIDTH TO BE PIPE Ø +300mm
MAXIMUM WIDTH TO BE PIPE Ø + 600mm

MINIMUM DEPTH FROM GROUND LEVEL TO TOP OF BARREL SHALL BE 900mm FOR WATERMAINS AND 600mm FOR SERVICE CONNECTIONS. IF COVER IS LESS, BED AND SURROUND PIPE WITH 150mm thk. CLASS C25 CONCRETE

WHERE WATERMAIN IS IN ROCK, THE ROCK SHALL BE EXCAVATED AND TRIMMED TO A DEPTH OF 100mm BELOW PIPE. LAYER OF SELECTED FILL SHALL BE 125mm TO ALLOW PIPE TO BE WORKED INTO TRUE LINE.

WHEN COVER TO PIPE IS LESS THAN 1200mm IN ROADWAYS. WATERMAIN SHALL HAVE CONCRETE BED AND SURROUND

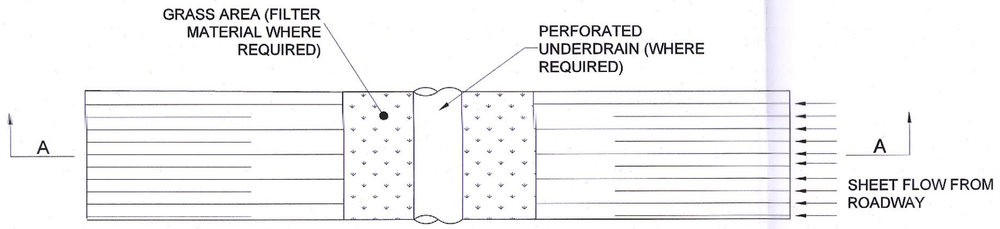

PLAN

SCALE 1:25

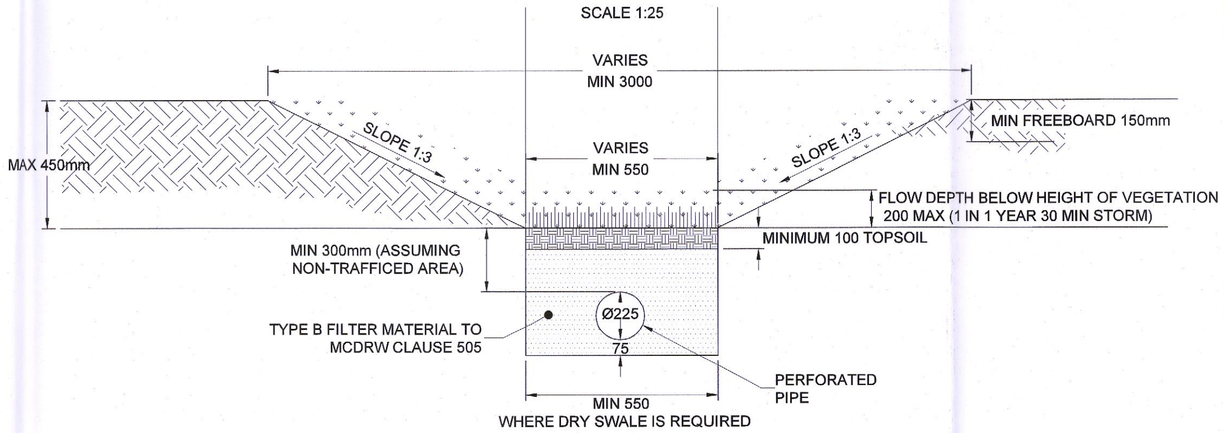

SECTION A-A

SCALE 1:25

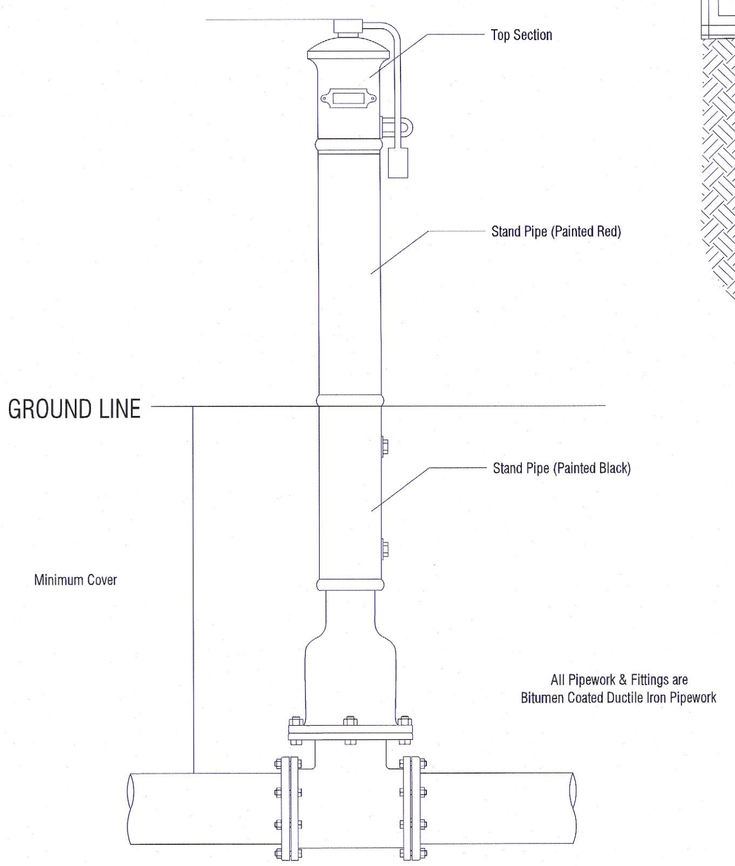

TYPICAL INDICATOR VALVE DETAIL

Scale NTS

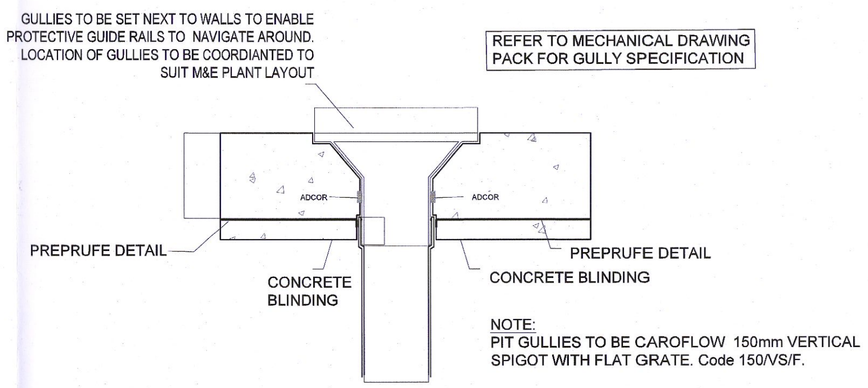

NOTE:
PIT GULLIES TO BE CAROFLOW 150mm VERTICAL SPIGOT WITH FLAT GRATE. Code 150/VS/F.

TYPICAL FLOOR GULLY DETAIL WITHIN DATA HALL

Scale 1:10

Rev	Description	Drawn	Checked	Date
P02	PLANNING ISSUE	LT	CD	14/07/22
P01	DRAFT PLANNING	LT	CD	21/06/22

Clifton Scannell Emerson Associates

Clifton Scannell Emerson Associates Limited
Consulting Engineers,
Seafort Lodge,
Castledawson Avenue,
Blackrock, Co. Dublin,
Ireland, A94 P7T8

T: +353 1 288 5006
F: +353 1 283 3466
E: info@csea.ie
W: www.csea.ie

Client: K2 STRATEGIC INFRASTRUCTURE IRELAND LTD.

Project: K2 DATACENTRE

Dwg. Title: PROPOSED SERVICES DETAILS SHEET 1

Drawn By: LT | Date: 09/05/22 | CSEA Job No.: 22_043

Checked By: CD | Scale: AS SHOWN @ A1

Project Code	Originator	Zone/ Phase	Level	Type	Role	Dwg. No.
22_043	CSE	00	XX	DR	C	2911

Status Code: S0 — Suitability Description: WORK IN PROGRESS

Revision: P02 — Project Status: PRELIMINARY

OSI Licence No.: EN 0042422 © OSI/GOVERNMENT OF IRELAND - © CSEA 2022