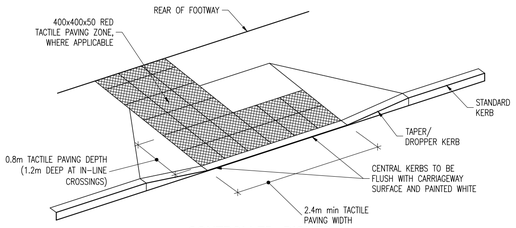

CONTROLLED DISHED CROSSING WITH TACTILE PAVING
SCALE 1:50

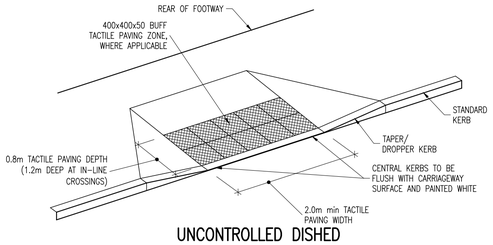

UNCONTROLLED DISHED CROSSING WITH TACTILE PAVING
SCALE 1:50

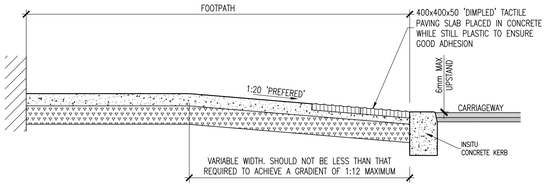

TYPICAL SECTION THROUGH DISHED CROSSING
SCALE 1:25

CONCRETE FOOTPATH

100mm CONCRETE PAVEMENT C40 AIR ENTRAINED OR C50 NON AIR ENTRAINED / EXPOSURE CLASS XF4 TO CL 1106(NRA) ON MINIMUM

150mm COMPACTED CLAUSE 808(NRA), LAID TO FALL WITH BLINDED SURFACE.

JOINTS TO BE FORMED WITH TWO LAYERS OF BITUMINOUS FELT FOR FULL SLAB DEPTH AT 3m CENTRES (JOINTS TO COINCIDE WITH JOINTS IN THE KERB AND POSITIONED AT CORNERS ETC LIABLE TO CRACKING). FINISH BY FLOATING WITH WOODEN TROWEL WHILE STILL GREEN THEN LIGHTLY BRUSHED WITH A BASS BROOM TO PRODUCE REQUIRED SURFACE TEXTURE TO WITHIN 100mm OF ALL JOINTS + EDGES.

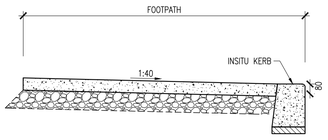

TYPICAL CONCRETE FOOTPATH DETAIL
SCALE 1:25

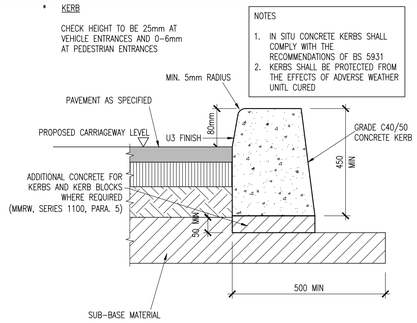

NOTES
1. IN SITU CONCRETE KERBS SHALL COMPLY WITH THE RECOMMENDATIONS OF BS 5931
2. KERBS SHALL BE PROTECTED FROM THE EFFECTS OF ADVERSE WEATHER UNITL CURED

INSITU CONCRETE KERB DETAIL
SCALE 1:10

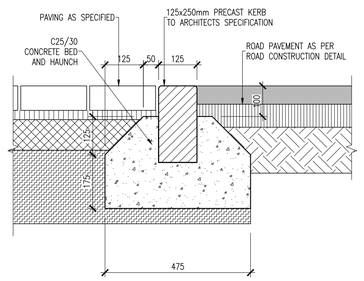

EDGE KERB DETAIL (DBM TO PAVING BLOCK)
SCALE 1:10

NOTES
1. IN SITU CONCRETE KERBS SHALL COMPLY WITH THE RECOMMENDATIONS OF BS 5931
2. KERBS SHALL BE PROTECTED FROM THE EFFECTS OF ADVERSE WEATHER UNITL CURED

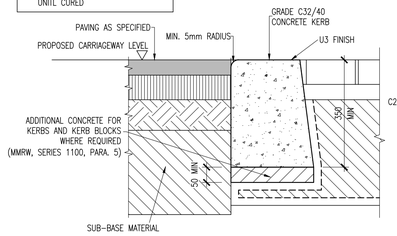

FLUSH KERB DETAIL
SCALE 1:10

NOTES
1. ALL DIMENSIONS ARE IN MILLIMETERS
2. PRECAST KERBS SHALL BE LAID AND LEVELLED IN ACCORDANCE WITH B.S. 7263 : PART2

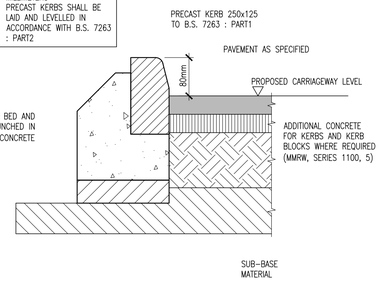

PRECAST KERB DETAIL
SCALE 1:10

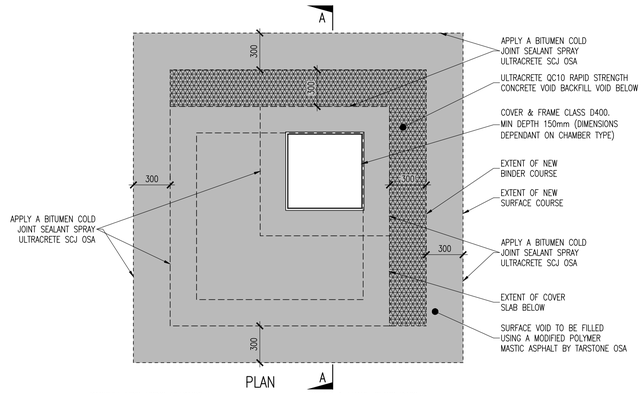

PLAN

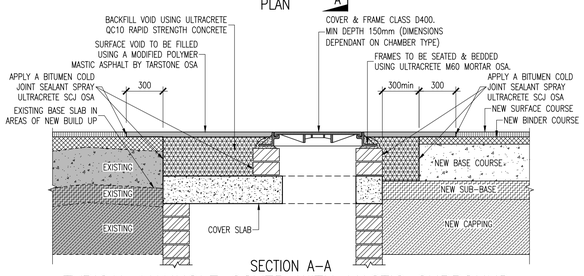

SECTION A–A

TYPICAL MANHOLE COVER WITH MASTIC SURROUND (TO BE APPLIED AT ALL EXISTING & NEW MANHOLES IN TRAFFICKED AREAS)
SCALE 1:25

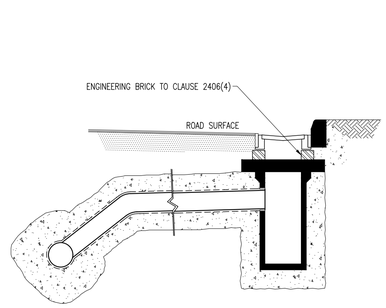

GULLY WITH CONNECTION ON OPPOSITE SIDE OF ROAD

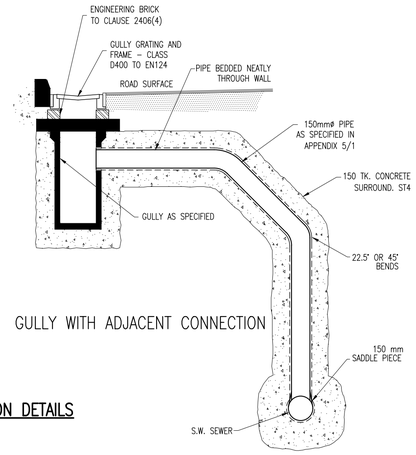

GULLY WITH ADJACENT CONNECTION

GULLY CONNECTION DETAILS
SCALE 1:25

NOTES :
1. EDGES OF EXISTING CARRIAGEWAY TO BE CUT BACK BY 0.5m WITH A ROTARY SAW TO FORM A VERTICAL FACE AND PRIMED IN ACCORDANCE WITH CLAUSE 920 (NOTE 1).

2. WHERE THE BASE COURSE IS TO BE LAID IN TWO LAYERS, THE UPPER LAYER OF BASE COURSE SHOULD BE STEPPED INTO THE EXISTING PAVEMENT BY 1.0m min WITH THE BINDER COURSE AND SURFACE COURSE TO BE EACH STEPPED IN A FURTHER 1.0m min REPECTIVELY.

NOTE :
ALL FACES OF COLD UPSTANDING EDGES SHALL BE TREATED TO CLAUSE 903.26 NOTE 1

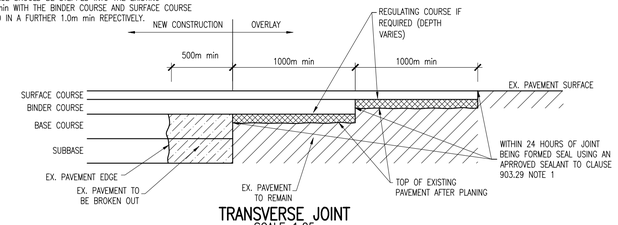

TRANSVERSE JOINT
SCALE 1:25

POST POCKET DETAIL (SIGN < 1.2.m HIGH)
SCALE 1:25

NOTES :
1. EDGES OF EXISTING CARRIAGEWAY TO BE CUT BACK BY 0.5m WITH A ROTARY SAW TO FORM A VERTICAL FACE AND PRIMED IN ACCORDANCE WITH CLAUSE 920 (NOTE 1).

2. WHERE THE BASE COURSE IS TO BE LAID IN TWO LAYERS, THE UPPER LAYER OF BASE COURSE SHOULD BE STEPPED INTO THE EXISTING PAVEMENT BY 0.3m min WITH THE BINDER COURSE AND SURFACE COURSE TO BE EACH STEPPED IN A FURTHER 0.3m min RESPECTIVELY.

NOTE :
ALL FACES OF COLD UPSTANDING EDGES SHALL BE TREATED TO CLAUSE 903.26 NOTE 1

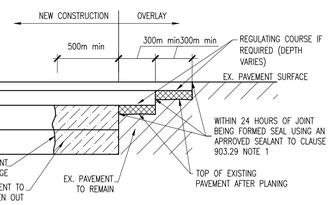

LONGITUDINAL JOINT DETAIL
SCALE 1:25

SHARED CYCLE PATH/FOOTPATH

50mm CLOSE GRADED SURFACE COURSE MACADAM (10mm AGGREGATE) TO CLAUSE 7.3 BS4967 ON 150mm GRANULAR SUB-BASE TO CLAUSE 808 WITH BLINDED SURFACE

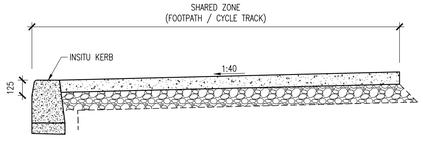

TYPICAL ASPHALT FOOTPATH DETAIL
SCALE 1:25

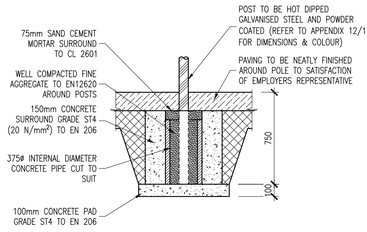

POST POCKET DETAIL
(SIGN > 1.2.m HIGH; MAX 3.0m TO TOP OF SIGN) STANDARD SIGNS ONLY; MAX SIGN AREA = 1.0m²
SCALE 1:25

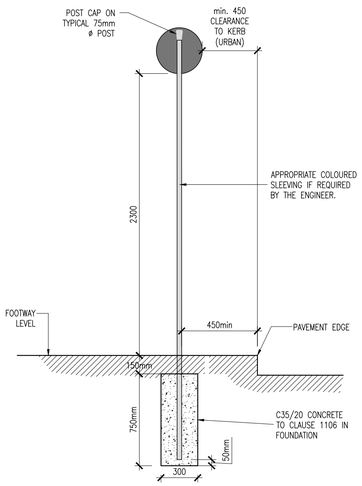

ROAD SIGN (SINGLE POST)
SCALE 1:25

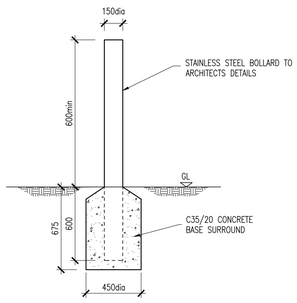

NOTE : BOLLARDS INSTALLED AT 1.5m c/c AND PLACED 1.75m FROM KERB U.N.O.

TRAFFIC BOLLARD DETAIL
SCALE 1:25

COLUMN HEIGHT	6.0m	8.0m	10.0m	12.0m
FOUNDATION DEPTH (A)	1.5m	1.8m	2.1m	2.4m

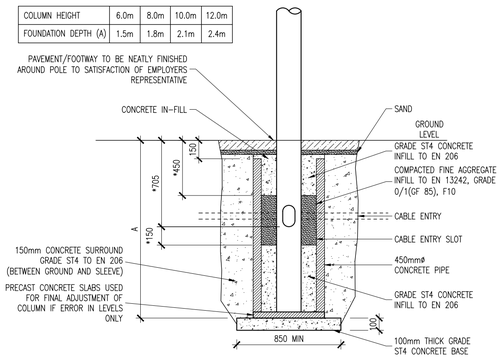

NOTE:
1. CONTRACTOR TO AGREE DIMENSIONS AND SETTING OUT WITH EMPLOYERS AGENT
2. DIMENSIONS MARKED * ARE DEPENDANT ON LIGHTING COLUMN SUPPLIED AND MUST BE AGREED WITH THE EMPLOYER'S REPRESENTATIVE.

TYPICAL LAMP STANDARD FOUNDATION
SCALE 1:25

© COPYRIGHT OF THIS DRAWING IS RESERVED BY DBFL CONSULTING ENGINEERS. NO PART SHALL BE REPRODUCED OR TRANSMITTED WITHOUT THEIR WRITTEN PERMISSION.

ON ORIGINAL
0 5 10 15 20 25 30 40 50mm

NOTES:

1. CLOSE GRADED SURFACE COURSE MACADAM SHALL COMPLY WITH THE REQUIREMENTS OF CLAUSE 912 OF THE NRA's 'SPECIFICATION FOR ROAD WORKS' AND SHALL SATISFY THE REQUIREMENTS OF TABLE 9/2. IT SHALL BE LAID & COMPACTED IN ACCORDANCE WITH CLAUSE 901 & CLAUSE 702
2. DENSE BITUMEN MACADAM BINDER COURSE SHALL COMPLY WITH THE REQUIREMENTS OF CLAUSE 906 OF THE NRA'S 'SPECIFICATION FOR ROAD WORKS' & SHALL SATISFY THE REQUIREMENTS OF TABLE 9/1. IT SHALL BE LAID & COMPACTED IN ACCORDANCE WITH CLAUSE 901 & CLAUSE 702.
3. SUB-BASE MATERIAL SHALL COMPLY WITH CLAUSE 808 GRANULAR MATERIAL TYPE B OF NRA's SPECIFICATION FOR ROAD WORKS (SRW) & SHALL SATISFY THE REQUIREMENTS OF TABLE 8/4 & 8/2.
4. SUB FORMATION & CAPPING MATERIAL SHALL COMPLY WITH CLAUSE 613 OF THE NRA'S 'SPECIFICATION FOR ROAD WORKS' & SHALL SATISFY THE REQUIREMENTS OF TABLE 6/1 & 6/2.
5. STONE BLINDING WITH 2–6.3mm AGGREGATE SHALL MEET THE FOLLOWING GRADINGS, IN ACCORDANCE WITH IS EN 13242

BS SIEVE SIZE (mm)	% BY MASS PASSING
14	100
10	98–100
6.3	80–99
2.0	0–20
1.0	0–5

6. CRUSHED STONE WITH 4–20mm AGGREGATE SHALL MEET THE FOLLOWING GRADINGS, IN ACCORDANCE WITH IS EN 13242

BS SIEVE SIZE (mm)	% BY MASS PASSING
40	100
31.5	98–100
20	90–99
10	25–70
4	0–15
5	0–5

7. ANY ROADS PROPOSED TO BE USED FOR CONSTRUCTION TRAFFIC ARE TO HAVE INCREASED DEPTH OF SUB-BASE FOR THE DURATION OF CONSTRUCTION IN ACCORDANCE WITH DBFL SPECIFICATIONS.
8. ALL WORKS SHALL BE COMPLETED IN ACCORDANCE WITH THE REQUIREMENTS OF THE LOCAL AUTHORITY.
9. ALL GEOGRIDS TO BE LAID IN ACCORDANCE WITH MANUFACTURERS SPECIFICATIONS.
10. ALL PERMEABLE PAVING SUB-FORMATION TO BE LAID TOWARD DRAINAGE PIPEWORK.

rev	date	description	by	chkd.
P01	05-05-22	PLANNING ISSUE	RMC	EDA

client approval: A - Approved; B - Approved with comments; C - Do not use

suitability: S0 - WORK IN PROGRESS
issue purpose: PLANNING

DBFL Consulting Engineers
Civil, Structural & Transportation Engineering
www.dbfl.ie
DUBLIN OFFICE: Ormond House, Upper Ormond Quay, Dublin 7, D07 W704 PHONE +353 1 400 4000
CORK OFFICE: Phoenix House, Monahan Road, Cork, T12 H1XY PHONE +353 (0) 21 2024538
WATERFORD OFFICE: Suite 8b The Atrium, Maritana Gate, Canada Street, Waterford, X91 W028 PHONE +353 51 309 500

project ref.
GAELCHOLAISTE PHIARSAIGH RATHFARNHAM

drawing title
TYPICAL ROAD CONSTRUCTION DETAILS SHEET 2

client
DEPARTMENT OF EDUCATION & SKILLS

designed by	author	scale	sheet size
EDA	RMC	VALUE	A1

drawing no. 190187-DBFL-RD-SP-DR-C-5002
revision P01