NOTES:

1 ALL DIMENSIONS ARE IN MILLIMETRES (mm) UNLESS NOTED OTHERWISE.

2 THE MINIMUM DEPTH OF COVER FROM THE FINISHED SURFACE TO THE EXTERNAL CROWN OF THE PIPE SHALL BE 750mm FOR SERVICE CONNECTIONS, 900mm FOR WATER MAINS. GREATER DEPTHS OF COVER AND/OR PIPE STRENGTH AND/OR A HIGHER CLASS OF BEDDING MATERIAL MAY BE REQUIRED WHERE HIGH TRAFFIC LOADING IS ANTICIPATED. THE MAXIMUM COVER SHOULD NOT EXCEED 1.2M WHERE PRACTICABLE.

3 CLAUSE 808 MATERIAL IN ACCORDANCE WITH THE TRANSPORT INFRASTRUCTURE IRELAND SPECIFICATION FOR ROAD WORKS IS TO BE USED AS BACKFILL MATERIAL WHERE THE WATER MAIN IS LOCATED IN ROADS, FOOTPATHS OR WHEN THE NEAREST PART OF THE TRENCH IS WITHIN 1M OF THE PAVED EDGE OF THE ROADWAY, CLAUSE 808 IS TO BE COMPACTED AS PER CLAUSE 802 OF THE TRANSPORT INFRASTRUCTURE IRELAND SPECIFICATION FOR ROAD WORKS.

4 SELECTED EXCAVATED MATERIAL MAY BE USED IN GREEN-FIELD AREAS ABOVE GRANULAR PIPE SURROUND MATERIAL SUBJECT TO THE APPROVAL OF IRISH WATER.

5 PIPE BEDDING SHALL COMPLY WITH WIS 4-08-02 AND IGN 4-08-01 GRANULAR MATERIAL SHALL BE 14mm TO 5mm GRADED AGGREGATE OR 10mm SINGLE SIZED AGGREGATE IS EN 13242.

6 IN SOFT GROUND CONDITIONS (CBR < 5) THE MATERIAL SHOULD BE EXCAVATED OUT AND DISPOSED OF IN ACCORDANCE WITH THE WASTE MANAGEMENT ACT AND CLAUSE 808 MATERIAL IN ACCORDANCE WITH THE TRANSPORT INFRASTRUCTURE IRELAND SPECIFICATION FOR ROAD WORKS SHALL REPLACE THE EXCAVATED MATERIAL, WRAPPED IN GEO-TEXTILE WRAPPING, ALTERNATIVELY, SPECIAL PIPE SUPPORT ARRANGEMENTS, INCLUDING PILING ETC. MAY BE REQUIRED WHERE THE DEPTH OF SOFT MATERIAL IS EXCESSIVE. SUCH ARRANGEMENTS SHALL BE SUBJECT TO ASSESSMENT BY IRISH WATER BEFORE ADVANCING WITH THE WORK.

7 PIPES SHALL NOT BE SUPPORTED ON STONES OR ROCKS, OR ANY HARD OBJECT AT ANY POINT ALONG THE TRENCH. ROCK SHALL BE EXCAVATED TO A DEPTH OF 150mm BELOW THE ACTUAL DEPTH OF THE TRENCH WITH THE VOID FILLED WITH CLAUSE 804 MATERIAL IN ACCORDANCE WITH THE TRANSPORT INFRASTRUCTURE IRELAND SPECIFICATION FOR ROAD WORKS. THE GRANULAR MATERIAL SHALL BE LAID ABOVE THIS VOID BACKFILL MATERIAL.

8 SHOULD MINIMUM COVER NOT BE ACHIEVABLE, CONCRETE GRADE C8/10 SHALL BE USED AS BACKFILL MATERIAL.

9 MARKER TAPE TO BE 400mm WIDE BLUE POLYETHYLENE MATERIAL IN ACCORDANCE WITH EN 12163, PLASTIC PIPES SHALL HAVE WARNING TAPE INCORPORATED A REINFORCED BAND BRACING WIRE. SERVICE PIPES SHALL HAVE 200mm WIDE MESH TAPE. MARKER TAPE TO BE LAID AT TOP OF PIPE BEDDING LAYER.

10 TRENCH WIDTHS FOR PIPE SIZES ≤80mm MAY BE <500mm, SUBJECT TO CONSIDERATION BEING GIVEN TO THE TRENCH DEPTH, HEALTH & SAFETY & CONSTRUCTION ACCESS REQUIREMENTS.

PIPE DIAMETER 'A' (mm)	DEPTH OF BEDDING 'C' (mm)
< 200	150
> 250	200
PIPE DIAMETER 'A' (mm)	**TRENCH WIDTH 'B' (mm)**
< 80	< SEE NOTE 10.
100	500
150	600
200	600
250	750
300	750
350	750
400	900
450	900

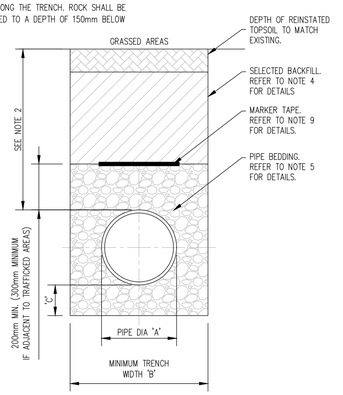

CROSS SECTION IN GRASSED AREAS

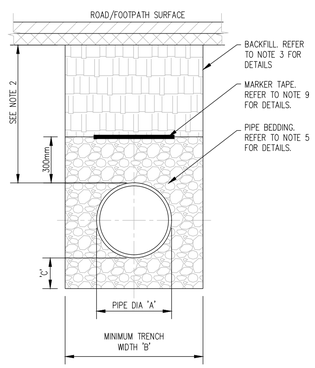

CROSS SECTION IN ROADS

TRENCH BACKFILL AND BEDDING
(STD – W – 13)
SCALE 1:20

NOTES:

1. ALL DIMENSIONS ARE IN MILLIMETRES (mm) UNLESS NOTED OTHERWISE.
2. STRUCTURAL DESIGN AND REINFORCEMENT DETAIL TO BE PROVIDED BY THE DEVELOPER AND SUBMITTED TO IRISH WATER FOR REVIEW.
3. CONCRETE FOR FLOW METER CHAMBER TO BE C30/37
4. PRECAST METER CHAMBER(WITH CONCRETE SURROUND) MAY BE USED SUBJECT TO IRISH WATER APPROVAL.
5. METER CHAMBER SHALL BE COVERED WITH APPROVED HEAVY DUTY METAL COVERS TO IS EN124 RATING D400. COVER AND FRAME SHALL BE SUITABLE FOR ROAD AND TRAFFIC CONDITIONS AND IS SUBJECT TO THE APPROVAL OF IRISH WATER.
6. 200mm ALL ROUND, 100mm DEEP CONCRETE PLINTH WITH PROTECTIVE STAINLESS STEEL METAL BAND AROUND COVER IN GRASS AREAS.
7. ANTI CORROSION TAPE TO BE PROVIDED AROUND BURIED FLANGES.
8. DUCTILE IRON PIPES AND FITTINGS TO BE IN ACCORDANCE WITH IS EN545. PE PIPES AND FITTINGS TO BE IN ACCORDANCE WITH IS EN 12201:2011.
9. ALL CHAMBERS TO BE CHECKED FOR UPLIFT BY THE DEVELOPER BASED ON GROUND CONDITIONS WITHIN THE SITE. SHOULD ANTI FLOATATION MEASURES BE REQUIRED THEY SHALL BE SUBJECT TO APPROVAL FROM IRISH WATER.
10. PIPEWORK TO BE DOWNSIZED TO ACCOMMODATE THE REQUIRED RANGE OF THE FLOW METER. STRAIGHT PIPE LENGTHS UPSTREAM AND DOWNSTREAM OF THE METER TO BE PROVIDED. IF THE METER IS NOT CAPABLE OF ACCURATE NIGHT FLOW MEASUREMENTS, A BY-PASS FLOW METER SHALL BE PROVIDED WITH APPROPRIATE VALVES, FITTINGS AND PIPEWORK.
11. ALL CONCRETE TO BE IN ACCORDANCE WITH IS EN206.

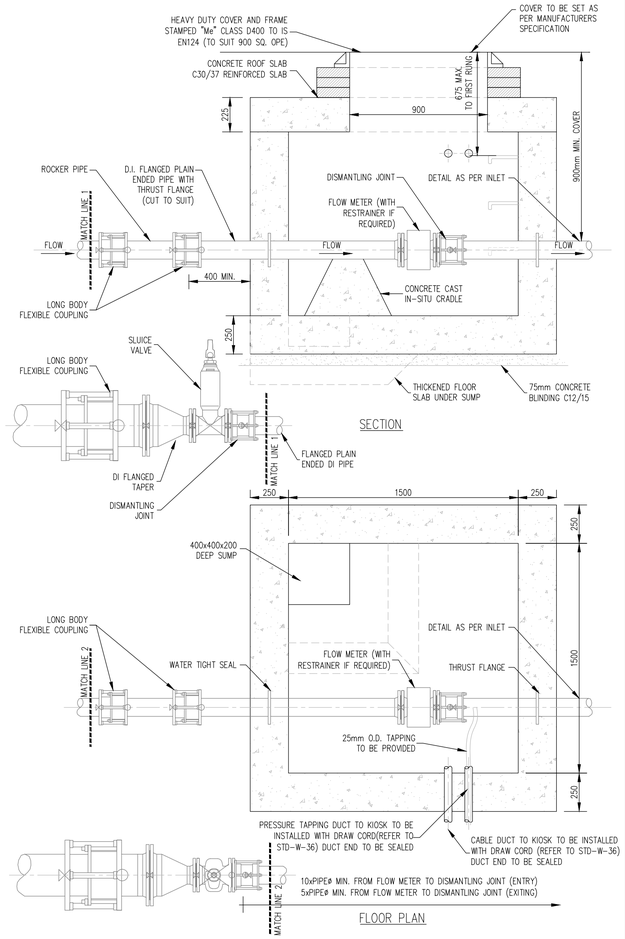

METER CHAMBER (<300mmø)
(STD – W – 26)
SCALE 1:20

NOTES:

1. 1 ALL DIMENSIONS ARE IN MILLIMETRES (mm) UNLESS NOTED OTHERWISE.
2. SLUICE VALVE CHAMBERS SHALL BE COVERED WITH APPROVED HEAVY DUTY METAL COVERS TO IS 261 OR BS 5834. COVER AND FRAME SHALL BE SUITABLE FOR ROAD AND TRAFFIC CONDITIONS AND IS SUBJECT TO THE APPROVAL OF IRISH WATER
3. SLUICE VALVES SHALL BE RESILIENT SEATED AND SHALL COMPLY WITH BS 5163-1, BS 5163-2, IS EN 1074-1, IS EN 1074-2, OR EQUIVALENT EU SPECIFICATIONS.
4. ALL SLUICE VALVES SHALL BE ANTI-CLOCKWISE CLOSING.
5. VALVE CHAMBER TO BE CONSTRUCTED OF PRECAST CONCRETE UNITS OR HIGH DENSITY BLOCKWORK. ALTERNATIVELY PROPRIETARY PREFABRICATED CHAMBER UNITS MAY ALSO BE USED SUBJECT TO APPROVAL FROM IRISH WATER.
6. CONCRETE CHAMBERS SHALL BE SURROUNDED BY A MINIMUM OF 150mm COMPACTED CLAUSE 808 MATERIAL AS PER STD-W-13.
7. DUCTILE IRON PIPES AND FITTINGS TO BE IN ACCORDANCE WITH IS EN 545.
8. 200mm ALL AROUND, 100mm DEEP CONCRETE PLINTH WITH PROTECTIVE STEEL METAL BAND AROUND COVER IN GREEN AREAS.
9. THRUST BLOCKS(NOT SHOWN ON DRAWING) TO BE PROVIDED AS PER STANDARD DRAWING STD-W-28 AT ALL TEES AND BENDS, TAPERS, DEAD ENDS AND PIPES AT STEEP SLOPES.
10. ANTICORROSION TAPE TO BE PROVIDED AROUND BURIED FLANGES.
11. ALL CONCRETE TO BE IN ACCORDANCE WITH IS EN 206
12. ALL THRUST FLANGES TO BE ADEQUATELY RESTRAINED BY THRUST BLOCKS AS PER DRAWING No. STD-W-28. THRUST BLOCKS NOT SHOWN FOR CLARITY

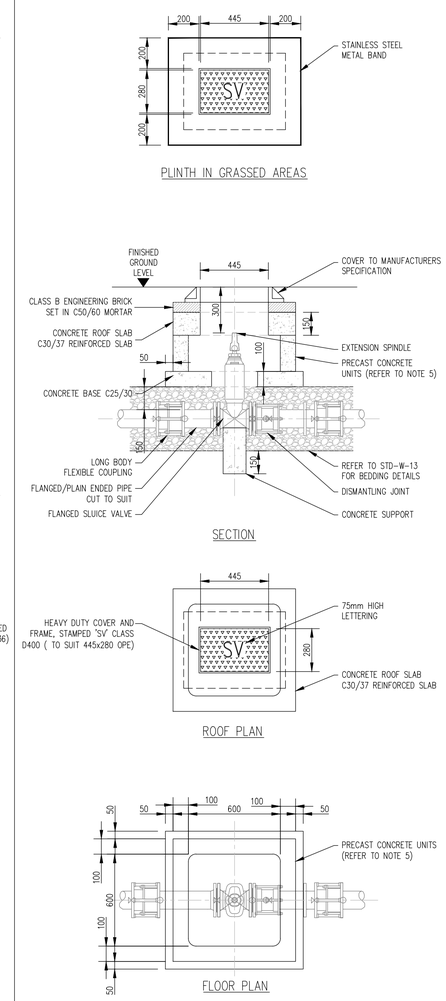

SLUICE VALVE CHAMBER
(PRECAST CONCRETE CONSTRUCTION)
(STD – W – 14)
SCALE 1:20

NOTES:

1. 1 ALL DIMENSIONS ARE IN MILLIMETRES (mm) UNLESS NOTED OTHERWISE.
2. HYDRANT CHAMBERS SHALL BE COVERED WITH APPROVED HEAVY DUTY METAL COVERS TO IS 261 OR BS 5834. COVER AND FRAME SHALL BE SUITABLE FOR ROAD AND TRAFFIC CONDITIONS AND IS SUBJECT TO THE APPROVAL OF IRISH WATER
3. ALL HYDRANTS, SURFACE BOX FRAMES AND COVERS SHALL COMPLY WITH THE RELEVANT PROVISIONS OF IS EN 14339, IS EN 1074-6 & BS 750. FIRE HYDRANTS SHALL BE TYPE 2. THE HYDRANT INLET SHALL BE 80mm DIAMETER WITH PN16.
4. ALL HYDRANTS SHALL BE CLOCKWISE CLOSING.
5. VALVE CHAMBER TO BE CONSTRUCTED OF PRECAST CONCRETE UNITS OR HIGH DENSITY BLOCKWORK. ALTERNATIVELY PROPRIETARY PREFABRICATED CHAMBER UNITS MAY ALSO BE USED SUBJECT TO APPROVAL FROM IRISH WATER.
6. CONCRETE CHAMBERS SHALL BE SURROUNDED BY A MINIMUM OF 150mm COMPACTED CLAUSE 808 MATERIAL AS PER STD-W-13.
7. DUCTILE IRON PIPES AND FITTINGS TO BE IN ACCORDANCE WITH IS EN 545.
8. 200mm ALL AROUND, 100mm DEEP CONCRETE PLINTH WITH PROTECTIVE STEEL METAL BAND AROUND COVER IN GREEN AREAS.
9. THRUST BLOCKS(NOT SHOWN ON DRAWING) TO BE PROVIDED AS PER STANDARD DRAWING STD-W-28 AT ALL TEES AND BENDS, TAPERS, DEAD ENDS AND PIPES AT STEEP SLOPES.
10. ANTICORROSION TAPE TO BE PROVIDED AROUND BURIED FLANGES.
11. ALL CONCRETE TO BE IN ACCORDANCE WITH IS EN 206

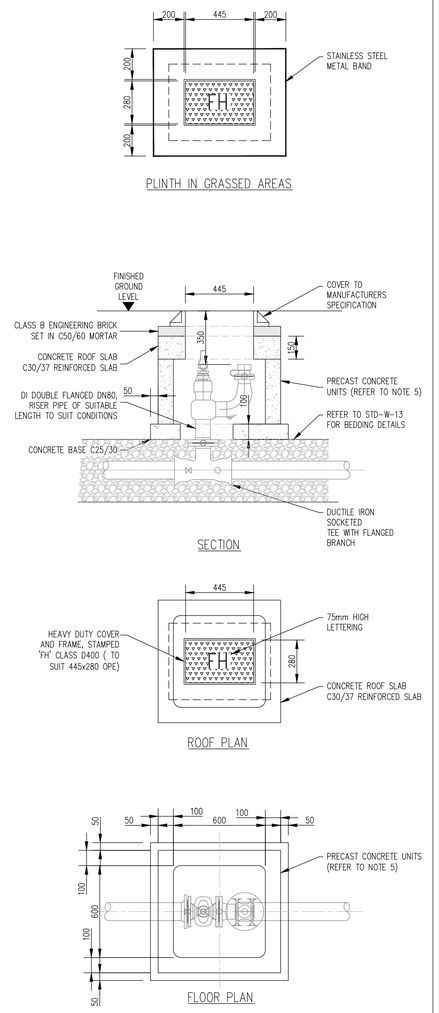

FIRE HYDRANT CHAMBER
(PRECAST CONCRETE CONSTRUCTION)
(STD – W – 16)
SCALE 1:20

NOTES:

1. 1 ALL DIMENSIONS ARE IN MILLIMETRES (mm) UNLESS NOTED OTHERWISE.
2. AIR VALVE CHAMBERS SHALL BE COVERED WITH APPROVED VENTILATED HEAVY DUTY METAL COVERS TO IS EN 124 RATING D400. COVER AND FRAME SHALL BE SUITABLE FOR ROAD AND TRAFFIC CONDITIONS AND IS SUBJECT TO THE APPROVAL OF IRISH WATER
3. AIR VALVES SHALL COMPLY WITH THE REQUIREMENTS OF IS EN 1074-4. AIR VALVES SHALL BE DOUBLE ORIFICE TYPE AND SHALL INCLUDE AN ISOLATING VALVE. THE ISOLATING VALVE SHALL BE A GATE VALVE CONFORMING TO IS EN 1074-2 AND SHALL BE OF A BOLTLESS BONNET DESIGN
4. THE AIR VALVES SHALL OF BODIES AND COVERS OF CAST IRON TO BS EN 1563 WITH FLANGES DRILLED TO PN 16 IN ACCORDANCE WITH BS EN 1092. EACH VALVE SHALL HAVE A LARGE AND A SMALL AIR ESCAPE ORIFICE WITH AN ISOLATING VALVE.
5. SERVICE CONNECTIONS SHALL NOT BE PROVIDED WITHIN 2m OF THE AIR VALVE LOCATION.
6. AIR VALVE CHAMBERS TO BE OF PRECAST CONCRETE UNITS OR HIGH DENSITY BLOCKWORK. ALTERNATIVE PROPRIETARY PREFABRICATED CHAMBER UNITS MAY ALSO BE USED, SUBJECT TO APPROVAL FROM IRISH WATER.
7. PRECAST CONCRETE CHAMBERS SHALL BE SURROUNDED BY A MINIMUM OF 150mm COMPACTED CLAUSE 808 MATERIAL AS PER STD-WW-13.
8. DUCTILE IRON PIPES AND FITTINGS TO BE IN ACCORDANCE WITH IS EN 545.
9. 200mm ALL AROUND, 100mm DEEP CONCRETE PLINTH WITH PROTECTIVE STEEL METAL BAND AROUND COVER IN GREEN AREAS.
10. THRUST BLOCKS(NOT SHOWN ON DRAWING) TO BE PROVIDED AS PER STANDARD DRAWING STD-W-28 AT ALL TEES AND BENDS, TAPERS, DEAD ENDS AND PIPES AT STEEP SLOPES.
11. ANTICORROSION TAPE TO BE PROVIDED AROUND BURIED FLANGES.
12. THE LOCATION OF THE AIR VALVE SHALL BE THE SUBJECT OF PARTICULAR AGREEMENT WITH IRISH WATER TO ENSURE THAT THE RISK OF CONTAMINATION THROUGH THE VALVE IS ELIMINATED;.
13. ALL CONCRETE TO BE IN ACCORDANCE WITH IS EN 206

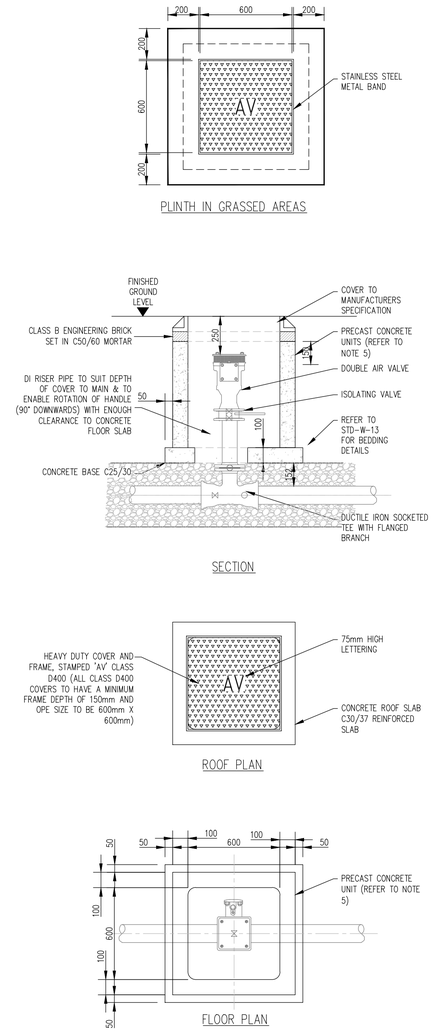

AIR VALVE CHAMBER
(PRECAST CONCRETE CONSTRUCTION)
(STD – W – 20)
SCALE 1:20

L088

PLANNING DRAWING
THIS DRAWING HAS BEEN ISSUED FOR PLANNING PURPOSES ONLY AND MUST NOT BE USED FOR ANY OTHER CIRCUMSTANCES

NOTES
1. For setting out refer to Architect's drawings.
2. This drawing to be read in conjunction with all other Architectural and Engineering drawings and all other relevant drawings and Specifications.
3. DO NOT SCALE THIS DRAWING. Use figured dimensions only.
4. No part of this document may be reproduced or transmitted in any form or stored in any retrieval system of any nature without the written permission as copyright holder except as agreed for use on the project for which the document was originally issued.
5. Ordnance Survey Ireland Licence Number EN 0074022

Rev. No.	Date	REVISION NOTE	Drn. By	Chkd. By
P1	15.04.2022	ISSUED FOR REVIEW	DB	DB
P2	16.05.2022	ISSUED FOR PLANNING	SC	RF

Client	Landmarque Belgard Development Co. Ltd
Project	The Arboury Belgard Road, Dublin 24
Title	WATERMAIN DETAILS
Dwg. No.	BR-CSC-ZZ-00-DR-C-0025

Date	Drn by	Chkd by	Aprvd by	Scale	Revision
April 2022	PS	DB	NB	AS SHOWN @ A1	P2

CS Consulting Group
DUBLIN | LONDON | LIMERICK
Head Office
19-22 Dame Street, Dublin 2.
T: +353 (0)1 5480863 F: +353 (0)1 9011355
e: info@csconsulting.ie
w: www.csconsulting.ie

NSAI Certified
Quality IS. EN ISO 9001:2008
Environment IS. EN ISO 14001:2004
Energy IS. EN ISO 50001:2011
Health & Safety OHSAS 18001:2007