COMHAIRLE CHONTAE ATHA CLIATH

DUBLIN COUNTY COUNCIL

REGISTRY SECTION,
PLANNING DEPARTMENT,
IRISH LIFE CENTRE,
LOWER ABBEY ST.,
DUBLIN 1.

28-8-91

Mr. J. Carson,
Senior Staff Officer,
Building Control Dept.,
Liffey House,
Tara St.

Please note that on 27.8.91 all outstanding fees were paid on file Number/s

91A/1067, 91A/990

for STAFF OFFICER,

BYE LAW APPLICATION FEES

REF. NO.: 91A/1067 CERTIFICATE NO.: 161

PROPOSAL: Internal modifications

LOCATION: Mangor Rd., Western Ind. Est.

APPLICANT: R. & A. Bailey

	1	2	3	4	5	6	7
CLASS	DWELLINGS/AREA LENGTH/STRUCTURE	RATE	AMT. OF FEE REQUIRED	AMT. LODGED	BALANCE DUE	RED. FEE APPL.	AMT. OF RED. FEE
A	Dwelling (Houses/Flats)	@ £55					
B	Domestic Ext. (Improvement/ Alts.)	@ £30					
C	Building for office or other comm. purpose	@ £3.50 per M^2 or £70					
D	Building or other structure for purposes of agriculture	@ £1.00 per M^2 in excess of 300 M^2 Min. £70					
E	Petrol Filling Station	@ £200					
F	Dev. of prop. not coming within any of the forgoing classes	£70 or £9 per .1 hect. whichever is the greater	£70	£70	–		

Column 1 Certified: Signed: _____ Grade: _____ Date: _____

Column 1 Endorsed: Signed: _____ Grade: _____ Date: _____

Columns 2,3,4,5,6 & 7 Certified: Signed: N. [illegible] Grade: III Date: 21/8/91

Columns 2,3,4,5,6 & 7 Endorsed: Signed: _____ Grade: _____ Date: _____

BYE LAW APPLICATION FEES

REF. NO.: 91A/1067 CERTIFICATE NO.: 160

PROPOSAL: office ext.

LOCATION: Fox & Geese Knockmitten Lane

APPLICANT: Gilbeys of Ire.

	1	2	3	4	5	6	7
CLASS	DWELLINGS/AREA LENGTH/STRUCTURE	RATE	AMT. OF FEE REQUIRED	AMT. LODGED	BALANCE DUE	RED. FEE APPL.	AMT. OF RED. FEE
A	Dwelling (Houses/Flats)	@ £55					
B	Domestic Ext. (Improvement/ Alts.)	@ £30					
C	Building ~~for~~ 170 m² office or other comm. purpose ~~170 m²~~	@ £3.50 per M² or £70	£5953.50	£5362	£591.50		
D	Building or other structure for purposes of agriculture	@ £1.00 per M² in excess of 300 M² Min. £70		£591.50 paid 27/8/91 N 471491			
E	Petrol Filling Station	@ £200					
F	Dev. of prop. not coming within any of the forgoing classes	£70 or £9 per .1 hect. whichever is the greater					

Column 1 Certified: Signed: [signature] Grade: DHT Date: 21/8/91.

Column 1 Endorsed: Signed: _____ Grade: _____ Date: _____

Columns 2,3,4,5,6 & 7 Certified: Signed: M. Do Grade: III Date: 18/2/91

Columns 2,3,4,5,6 & 7 Endorsed: Signed: _____ Grade: _____ Date: _____

COMHAIRLE CHONTAE ATHA CLIATH

DUBLIN COUNTY COUNCIL

INCORRECT FEE WITH BYE LAW APPLICATION

TELEPHONE: 724755
EXTENSION: 231/234
FAX.: 724896

PLANNING DEPARTMENT,
IRISH LIFE CENTRE,
LOWER ABBEY STREET,
DUBLIN 1.

Scott Tallon Walker Architects,
19 Merrion Square,
Dublin 2.

22/8/91

REG. REF.: 91A/1067

RE: Office extension at Fox & Geese, Knockmitten Lane, for Gilbey's of Ireland.

Dear Sir/Madam,

I refer to your application for Bye Law approval in respect of the above proposal. I wish to inform you that the Planning Authority will not commence to consider the application until the appropriate fee is paid. **If no fee or a fee less than the appropriate fee has been received by the County Council on the expiration of two months, commencing on the day the application is received, the application will be regarded as having been withdrawn.**

The correct fee for the above mentioned application is £ 5,953.50.
Please quote the Register Reference No. stated above when submitting the fee.

AMOUNT LODGED = £5,362.00
AMOUNT DUE = £ 591.50

Yours faithfully,

for PRINCIPAL OFFICER

91A/1067

CERTIFICATE NO: 25847

PROPOSAL: Office extension to manufacturing Plant

LOCATION: Fox & Geese Common, Knockmitten Lane Dublin 12

APPLICANT: Gilbeys of Ireland Ltd

1	2	3	4	5	6	7
DWELLINGS/AREA LENGTH/STRUCT	RATE	AMT. OF FEE REQ.	AMOUNT LODGED	BALANCE DUE	BALANCE DUE	DATE/ RECEIPT NO
Dwellings	£252					
	£216					
	£30p per M² in excess of 300M² MIN. £40					
metres² 1701.0m²	£21.75 per M² or £40	£2976.75	£2976.75			
x .1 hect.	£225 per .1 hect. or £250					
x .1 hect.	£225 per .1 hect or £40					
x .1 hect	£225 per .1 hect. or £100					
	£2100					
x metres²	£210 per M² or £40					
x M²/1,000M²	£215 per 1,000M² or £40					
x .1 hect.	£25 per .1 hect. or £40					

Items 2,3,4,5,6 & 7 Certified Signed: [signature] Grade: Date: 2/7/91

Items 2,3,4,5,6 & 7 Endorsed: Signed: Grade: Date:

Items 2,3,4,5,6 & 7 Certified Signed: Grade: Date: 2/7/91

Items 2,3,4,5,6 & 7 Endorsed: Signed: Grade: Date:

LOCATION GOVERNMENT (PLANNING AND DEVELOPMENT) ACTS, 1963 TO 1982

ASSESSMENT OF FINANCIAL CONTRIBUTION

REG. REF.: 914/1067

CITY REG.:

SERVICES INVOLVED: WATER/FOUL SEWER/SURFACE WATER

AREA OF SITE:

FLOOR AREA OF PRESENT PROPOSAL: 18310 FT² J.Y. 2/7/91.

MEASURED BY:

CHECKED BY:

METHOD OF ASSESSMENT:

TOTAL ASSESSMENT

MANAGER'S ORDERED NO: P/ /
DATED

ENTERED IN CONTRIBUTIONS REGISTER:

DEVELOPMENT CONTROL ASSISTANT GRADE

STD: $\frac{18310}{1000} \times 750$

= ~~18~~ 13732-50

say £13733

UR 22/8/90

Mary Galvin,

5

PLANNING DEPARTMENT BOOK FOLIO

(1) Date Lodged

LOCATION: Western Estate, Clondalkin REG.REF. 91A/1067

APPLICANT: R. & A. Bailey & Co. Ltd.

PROPOSAL: Int. Alts.

PLANNING DEPT.
DEVELOPMENT CONTROL SECT
Date 10.09.91
Time 9.30

DUBLIN CO

(2) Date referred

Chief Medical Officer, Eastern Health Board

(3) Rec'd San. Services

No objections to this proposal provided compliance with

1) Food Hygiene Regulations 1950-89

2) Office premises Act 1958

a) Suitable and sufficient ventilation to be provided in all areas as follows

i) Manufacturing/Processing areas 4-6 air changes/hr minimum.

ii) offices 4-6 air changes/hr minimum.

iii) stores. Permanent fresh air vents to be installed in stores.

(4) Dispatched by San. Ser. to C.M.O.:

(5) Rec'd Planning:

(6) Date to Planner:

(7) D.P.O. Report to be submitted before:

(8) DPO Report submitted to S.A.O.:

(9) Decision due:

J Kelly
EHO 4/9/91

ENDORSED: [illegible] DATE: 5.9.91

John 6 Kelly

Mary Galvin.

Register Reference : 91A/1067

Date : 3rd July 1991

Development : 2 storey office extension to the manufacturing/warehouse plant

LOCATION : Western Estate, Clondalkin

Applicant : R & A Bailey & Co. Ltd

App. Type : PERMISSION

Planning Officer : M.GALVIN

Date Recd. : 27th June 1991

Attached is a copy of the application for the above development .Your report would be appreciated within the next 28 days.

PLANNING DEPT.
DEVELOPMENT CONTROL SECT
Date 20.08.91
Time 4.00

Yours faithfully,

.....

for PRINCIPAL OFFICER

I have no objection to this proposal provided that suitable and sufficient ventilation is provided in all offices and stores. The sanitary accommodation, adjoining lobbies and locker rooms should be ventilated directly to the external air. Drinking water supply points must be provided for staff.

Jackie Kelly.
EHO. 30/7/91

John Healy 1/8/91
SUPER.ENVIRON. HEALTH OFFICER,
33 GARDINER PLACE,
DUBLIN 1.

SS + EHO

Register Reference : 91A/1067

Date : 3rd July 1991

Development : 2 storey office extension to the manufacturing/warehouse plant

LOCATION : Western Estate, Clondalkin

Applicant : R & A Bailey & Co. Ltd

App. Type : PERMISSION

Planning Officer : M.GALVIN

Date Recd. : 27th June 1991

DUBLIN COUNTY COUNCIL
22 JUL 1991
ENV. HEALTH

Attached is a copy of the application for the above development .Your report would be appreciated within the next 28 days.

PLANNING DEPT.
DEVELOPMENT CONTROL SECT
Date 20.08.91
Time 4.00

Yours faithfully,

for PRINCIPAL OFFICER

DUBLIN Co. COUNCIL
- 5 JUL 1991
SAN SERVICES

DUBLIN CO. COUNCIL
SANITARY SERVICES
18 JUL 1991
Returned:

Date received in Sanitary Services .....

FOUL SEWER

No objection to this office extension.
Internal drainage is to be to the requirements of B.B.L. dept. (these are not detailed).

Note This existing effluent is subject to a licence under the Water Pollution Act.

SURFACE WATER

Available to existing system.
Internal drainage arrangements are to be to the requirements of B.B.L. dept. (these are not detailed)

11-7-91

SENIOR ENGINEER,
SANITARY SERVICES DEPARTMENT,
46/49 UPPER O'CONNELL STREET,
DUBLIN 1

11/7/91

PLANNING DEPT.
DEVELOPMENT CONTROL SECT
Date 20.08.91
Time 4.00

Register Reference : 91A/1067 Date : 3rd July 1991

DUBLIN COUNTY COUNCIL
22 JUL 1991
EN.

ENDORSED _____ DATE _____

WATER SUPPLY Recommend Refusal
Insufficient information to deal with the file re exists & proposed watermain layouts required.
J. Hanley A/Sec
9/7/91

ENDORSED _____ DATE 16/7/91

Register Reference : 91A/1067 Date : 3rd July 1991

Development : 2 storey office extension to the manufacturing/warehouse plant

LOCATION : Western Estate, Clondalkin

Applicant : R & A Bailey & Co. Ltd

App. Type : PERMISSION

Planning Officer : M.GALVIN

Date Recd. : 27th June 1991

MG.

Attached is a copy of the application for the above development .Your report would be appreciated within the next 28 days.

Yours faithfully,

.....

for PRINCIPAL OFFICER

I have no objection to this proposal provided that suitable and sufficient ventilation is provided in all offices and stores. The sanitary accommodation, adjoining lobbies and locker rooms should be ventilated directly to the external air. Drinking water supply points must be provided for staff.

Jackie Kelly.
EHO. 30/7/91

John Healy 1/8/91
SUPER.ENVIRON. HEALTH OFFICER,
33 GARDINER PLACE,
DUBLIN 1.

Many.

DUBLIN COUNTY COUNCIL

REG. REF: 91A/1067.

DEVELOPMENT: 2 storey office ext. to the manufacturing/warehouse plan.

LOCATION: Western Estate, Clondalkin.

APPLICANT: R & A Bailey & Co. Ltd.

DATE LODGED: 27.6.91.

---

1) To comply with Dublin County Council Development Standards this complex (existing and proposed extension) should have in excess of 500 car parking spaces (i.e. 500 to 555 max.) Only 260 spaces are shown.

2) Applicant to be conditioned to consult with and agree with Roads Department a revised car parking capacity and layout.

3) A financial contribution, in the sum of money equivalent to the value of £12,000.00 (i.e. 60 car parking spaces x £200) as on 1st January, 1991, updated in accordance with the Wholesale Price Index-Building and Construction (Capital Goods) as published by the Central Statistics Office to the value pertaining at the time of payment shall be paid by the developer to Dublin County Council towards the cost of road improvements and Traffic Management proposals in the area serving this site.

PLANNING DEPT.
DEVELOPMENT CONTROL SECT
Date 24.07.91
Time 9.55

TB/BMcC
15.7.91.

SIGNED: [signature] **ENDORSED:**

DATE: 15/7/91 **DATE:**

SS + EHO

(P)

(R)

Register Reference : 91A/1067 Date : 3rd July 1991

Development : 2 storey office extension to the manufacturing/warehouse plant

LOCATION : Western Estate, Clondalkin

Applicant : R & A Bailey & Co. Ltd

App. Type : PERMISSION

Planning Officer : M.GALVIN

Date Recd. : 27th June 1991

PLANNING DEPT.
DEVELOPMENT CONTROL SECT
Date 19.07.91
Time 11.35

Attached is a copy of the application for the above development .Your report would be appreciated within the next 28 days.

Yours faithfully,

for PRINCIPAL OFFICER

DUBLIN Co. COUNCIL
- 5 JUL 1991
SAN SERVICES

DUBLIN CO. COUNCIL
SANITARY SERVICES
18 JUL 1991
Returned

Date received in Sanitary Services .....

FOUL SEWER

No objection to this office extension.

Internal drainage is to be to the requirements of B.B.L. dept. (these are not detailed).

Note The existing effluent is subject to a licence under the Water Pollution Act.

SURFACE WATER

Available to existing system.

Internal drainage arrangements are to be to the requirements of B.B.L. dept. (these are not detailed)

11-7-91

SENIOR ENGINEER,
SANITARY SERVICES DEPARTMENT,
46/49 UPPER O'CONNELL STREET,
DUBLIN 1

11/7/91

Register Reference : 91A/1067

Date : 3rd July 1991

ENDORSED _____ DATE _____

Recommend Refusal

WATER SUPPLY Insufficient information to deal with the file in equity & proposed watermain layouts required.

9/7/91

ENDORSED _____ DATE 16/7/91

PLANNING DEPT.
DEVELOPMENT CONTROL SECT
Date 19.07.91
Time 11.35

DUBLIN COUNTY COUNCIL

REG. REF: 91A/1067.

DEVELOPMENT: 2 storey office ext. to the manufacturing/warehouse plan.

LOCATION: Western Estate, Clondalkin.

APPLICANT: R & A Bailey & Co. Ltd.

DATE LODGED: 27.6.91.

---

1) To comply with Dublin County Council Development Standards this complex (existing and proposed extension) should have in excess of 500 car parking spaces (i.e. 500 to 555 max.) Only 260 spaces are shown.

2) Applicant to be conditioned to consult with and agree with Roads Department a revised car parking capacity and layout.

3) A financial contribution, in the sum of money equivalent to the value of £12,000.00 (i.e. 60 car parking spaces x £200) as on 1st January, 1991, updated in accordance with the Wholesale Price Index-Building and Construction (Capital Goods) as published by the Central Statistics Office to the value pertaining at the time of payment shall be paid by the developer to Dublin County Council towards the cost of road improvements and Traffic Management proposals in the area serving this site.

PLANNING DEPT.
DEVELOPMENT CONTROL SECT
Date 16.07.91.
Time 12.30

TB/BMcC
15.7.91.

SIGNED: [signature] ENDORSED:

DATE: 15/7/91 DATE:

Order No. P/3926/91

COMHAIRLE CHONTAE ÁTHA CLIATH

Record of Executive Business and Manager's Orders

CONTRIBUTION:
Standard: £13,713
Roads:
Sewers:
Open Space:
Other:
SECURITY:
Bond / C.I.F.:
Cash:

Permission for a 2 storey office extension to the manufacturing/warehouse plant of R. & A. Bailey & Co. Ltd. at Western Estate, Clondalkin for Gilbeys of Ireland (Manufacturing) Ltd.

Scott Tallon Walker Architects,
19, Merrion Square,
Dublin 2.

Reg. Ref.	91A/1067
App. Recd:	27.06.1991
Floor Area:	1532 sq. m.
Site Area:	90,650 sq. m.
Zoning:	

Report of the Dublin Planning Officer, dated 19 August 1991

This is an application for **PERMISSION** for a 2 storey office extension at the above consisting of 1,532 sq. metres. The site is located on the Nangor Fox and Geese Road.

Sanitary Services report noted.

Senior Environmental Health Officer report noted.

Roads Engineer report noted.

In regard to the financial contribution referred to by roads, this site was part of the Western Industrial Estate, Phase I. This phase involved the applicants improvements to Knockmitten Lane and construction of portion of the Nangor-Fox and Geese Road. Accordingly, it would not be appropriate to require a financial contribution towards road works.

The proposed development is consisted with the provisions of the Development Plan.

I recommend that a decision to **GRANT PERMISSION** be made under the Local Government (Planning and Development) Acts, 1963-1990 subject to the following (8) conditions:-

(NP/BB)

For Dublin Planning Officer

Endorsed:- for Principal Officer

Order:- A decision pursuant to Section 26(1) of the Local Government (Planning and Development) Acts, 1963-1990, to **GRANT PERMISSION** for the above proposal subject to the (8) conditions set out above is hereby made.

Dated: 23 August, 1991.

~~ASSISTANT CITY & COUNTY MANAGER~~ Authorised Officer

to whom the appropriate powers have been delegated by Order of the Dublin City and County Manager, dated 6th August, 1991.

Order No. P/8926/91

COMHAIRLE CHONTAE ÁTHA CLIATH

Record of Executive Business and Manager's Orders

Permission for a storey office extension to the manufacturing/warehouse plant of R. & A. Bailey & Co. Ltd. at Western Estate, Clondalkin for Gilbeys of Ireland (Manufacturing) Ltd.

CONDITIONS	REASONS FOR CONDITIONS
1. The development to be carried out in its entirety in accordance with the plans, particulars and specifications lodged with the application, save as may be required by the other conditions attached hereto.	1. To ensure that the development shall be in accordance with the permission and that effective control be maintained.
2. That before development commences, approval under the Building Bye-Laws be obtained, and all conditions of that approval be observed in the development.	2. In order to comply with the Sanitary Services Acts, 1878-1964.
3. That the requirements of the Supervising Environmental Health Officer be ascertained and strictly adhered to in the development.	3. In the interest of health.
4. That the requirements of the Chief Fire Officer be ascertained and strictly adhered to in the development.	4. In the interest of safety and the avoidance of fire hazard.
5. That the water supply and drainage arrangements, including the disposal of surface water, be in accordance with the requirements of the County Council.	5. In order to comply with the Sanitary Services Acts 1878-1964.
6. That off-street car parking facilities and parking for trucks be provided in accordance with the Development Plan Standards.	6. In the interest of the proper planning and development of the area.
7. That no advertising sign or structure be erected, except those which are exempted development, without prior approval of the Planning Authority.	7. In the interest of the proper planning and development of the area.
8. That a financial contribution in the sum of £13,733. be paid by the proposer to the Dublin County Council towards the provision of public services in the area of the proposed development and which will facilitate this development; this contribution to be paid prior to commencement of development on site.	8. In the interest of the proper planning and development of the area.

M.G.

SS + EHO

Register Reference : 91A/1067

Date : 3rd July 1991

Development : 2 storey office extension to the manufacturing/warehouse plant

LOCATION : Western Estate, Clondalkin

Applicant : R & A Bailey & Co. Ltd

App. Type : PERMISSION

Planning Officer : M.GALVIN

Date Recd. : 27th June 1991

PLANNING DEPT.
DEVELOPMENT CONTROL SECT
Date 19.07.91
Time 11.35

Attached is a copy of the application for the above development .Your report would be appreciated within the next 28 days.

Yours faithfully,

for PRINCIPAL OFFICER

DUBLIN Co. COUNCIL
- 5 JUL 1991
SAN SERVICES

DUBLIN CO.
SANITARY SERVICES
18 JUL 1991
Returned

Date received in Sanitary Services .....

FOUL SEWER

No objection to this office extension.

Internal drainage is to be to the requirements of B.B.L. dept. (these are not detailed).

Note The existing effluent is subject to a licence under the Water Pollution Act.

SURFACE WATER

Available to existing system.

Internal drainage arrangements are to be to the requirements of B.B.L. dept. (these are not detailed)

11-7-91

SENIOR ENGINEER,
SANITARY SERVICES DEPARTMENT,
46/49 UPPER O'CONNELL STREET,
DUBLIN 1

11/7/91

Register Reference : 91A/1067

Date : 3rd July 1991

ENDORSED _____ DATE _____

Recommend Refusal

WATER SUPPLY Insufficient information to deal with the file in equity & proposed watermain layouts required.

J Atkinson A/SEE
9/7/91

ENDORSED _____ DATE 16/7/91

PLANNING DEPT.
DEVELOPMENT CONTROL SECT
Date 19.07.91
Time 11.35

Register Reference : 91A/1067

Date : 3rd July 1991

Development : 2 storey office extension to the manufacturing/warehouse plant

LOCATION : Western Estate, Clondalkin

Applicant : R & A Bailey & Co. Ltd

App. Type : PERMISSION

Planning Officer : M.GALVIN

Date Recd. : 27th June 1991

Attached is a copy of the application for the above development .Your report would be appreciated within the next 28 days.

Yours faithfully,

.....

for PRINCIPAL OFFICER

I have no objection to this proposal provided that suitable and sufficient ventilation is provided in all offices and stores. The sanitary accommodation, adjoining lobbies and locker rooms should be ventilated directly to the external air. Drinking water supply points must be provided for staff.

Jackie Kelly.
EHO. 30/7/91

John Healy 1/8/91
SUPER.ENVIRON. HEALTH OFFICER,
33 GARDINER PLACE,
DUBLIN 1.

PLANNING DEPT.
DEVELOPMENT CONTROL SECT
Date 8/8/91
Time 4.10

Mary.

DUBLIN COUNTY COUNCIL

REG. REF: 91A/1067.

DEVELOPMENT: 2 storey office ext. to the manufacturing/warehouse plan.

LOCATION: Western Estate, Clondalkin.

APPLICANT: R & A Bailey & Co. Ltd.

DATE LODGED: 27.6.91.

---

1) To comply with Dublin County Council Development Standards this complex (existing and proposed extension) should have in excess of 500 car parking spaces (i.e. 500 to 555 max.) Only 260 spaces are shown.

2) Applicant to be conditioned to consult with and agree with Roads Department a revised car parking capacity and layout.

3) A financial contribution, in the sum of money equivalent to the value of £12,000.00 (i.e. 60 car parking spaces x £200) as on 1st January, 1991, updated in accordance with the Wholesale Price Index-Building and Construction (Capital Goods) as published by the Central Statistics Office to the value pertaining at the time of payment shall be paid by the developer to Dublin County Council towards the cost of road improvements and Traffic Management proposals in the area serving this site.

PLANNING DEPT.
DEVELOPMENT CONTROL SECT
Date 24.07.91
Time 9.50

TB/BMcC
15.7.91.

SIGNED: [signature] ENDORSED:

DATE: 15/7/91 DATE:

Dublin County Council Comhairle Chontae Atha Cliath

Planning Department

Bloc 2, Ionad Bheatha na hEireann,
Block 2, Irish Life Centre,
Sraid na Mainistreach Iacht,
Lower Abbey Street,
Baile Atha Cliath 1.
Dublin 1.
Telephone. (01)724755
Fax. (01)724896

Mr. J. Carson,
Liffey House,
Dublin 2.

Our Ref.
Your Ref.
Date 16.12.91.

Re: Development at Fox - Geeds Knocknitter Lane
Reg. Ref. No. : 91A/1069

I refer to the submission for Building Bye-Law Approval received in this Department on 6.12.91.

The submission is in compliance with conditions of Building Bye-Law Approval issued. Please confirm that the submission is strictly compliance as requested and not a new application and accordingly that a Bye-Law fee is not required. Documents enclosed.

for Noleen Deane
STAFF OFFICER,
REGISTRY SECTION

Ove Arup & Partners Ireland
Consulting Engineers

10 Wellington Road
Ballsbridge Dublin 4
Telephone 01-683112
Telex 31652 Arup EI
Fax 01-683169

TD/MMC
4 December 1991

Building Control Section
Planning Department
Block 2
Irish Life Centre
Lwr Abbey St
Dublin 1

91A/1067
1.0.0.2
BBL Cont

ARUP

Dear Sirs

D 545/10 R&A Bailey & Co Ltd

Bye-law Approval Notice Order No. 91A/1067, Proposal BBL/3267/91

In accordance with Condition 3 of the above mentioned notice, we submit typical structural calculations.

Yours faithfully
for
OVE ARUP & PARTNERS IRELAND

Tim Dowling

06 DEC 91

Tim Dowling

Encl.

ARUP Ove Arup & Partners Ireland
Calculation Sheet

Job No.	Sheet No.	Rev.
D545/10		

Member/Location

Drg. Ref.

Job Title

Made by | Date | Chd.

R + A BAILEY & Co LTD

OFFICE EXTENSION

WESTERN ESTATE

CLONDALKIN

TYPICAL CALCULATIONS

TYPICAL FOUNDATION

TYPICAL COLUMN

GROUND FLOOR SLAB

FIRST FLOOR SLAB

VERTICAL WALL STIFFENER

ARUP Ove Arup & Partners Ireland
Calculation Sheet

Job No.	Sheet No.	Rev.
D545-10	0-01	

Member/Location

Drg. Ref.

GILBEY'S IRELAND LTD
Job Title
NEW OFFICE EXTENSION

Made by T. O Date NOV 91 Chd.

0.0 PREFACE

1.0 CODES, MATERIALS

2.0 FOUNDATIONS

3.0 BASEMENT SLAB

4.0 COLUMNS

5.0 GROUND FLOOR SUSPENDED

6.0 FIRST FLOOR SLAB

7.0 STEELWORK, STABILITY

ARUP Ove Arup & Partners Ireland
Calculation Sheet

Job No.	Sheet No.	Rev.
D545-10	1.0	

Member/Location

Drg. Ref.

Job Title: GILBEY'S IRELAND LTD — NEW OFFICE EXTENSION

Made by: T.D Date: OCT-91 Chd.

CODES

BS 8110 - STRUCTURAL USE OF CONCRETE

CP3 - CHAPTER V PART II - WIND LOADING

BS 6399 PART I - DESIGN LOADINGS

MATERIALS

CONCRETE GRADE - 35 N

STEEL REINF - HIGH YIELD - TYPE 2

- MILD STEEL PLAIN

STRUCTURAL STEEL - GRADE 43

FIRE PROTECTION

BASEMENT - 4 HOURS

SUPERSTRUCTURE - 2 HOURS

ARUP Ove Arup & Partners Ireland Calculation Sheet	Job No. D545/10	Sheet No. 2-01	Rev.
	Member/Location Column K4 B.4		
GILBEYS IRELAND LTD	Drg. Ref.		
Job Title NEW OFFICE EXTENSION	Made by TD	Date	Chd.

AREA supported at roof = 45 m²

AREA supported at first floor : 36 m²

LOADING	Gk	Qk.
ROOF		
Gk : 45 x 2.5	112.5	
Qk : 45 x 1.5		67.5
1st floor		
Gk . 300 thk slab : 7.2 x 36	260	
Qk : 6.5 x 36		234
Ground floor	—	—
BASEMENT	—	—
TOTAL	372.5	301.5

- TOTAL SERVICE LOAD : 672 kN

- PAD SIZE required $= \frac{672}{200} = 3.36$ m²

select : 2.2 x 2.2 x 0.5 m Dp base

Ove Arup & Partners Ireland Calculation Sheet	Job No. D545/10	Sheet No. 2-02	Rev.
	Member/Location foundation under column K4 13.4		
G. LEY'S IRELAND LTD	Drg. Ref.		
Job Title NEW OFFICE EXTENSION	Made by T D	Date	Chd.

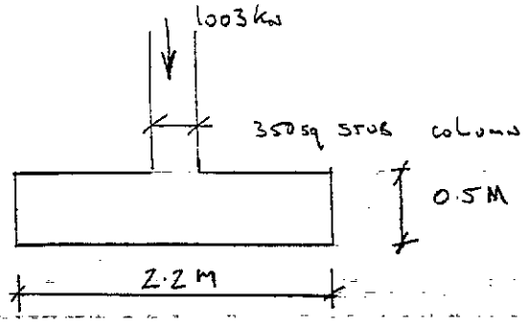

Design Load = 1003 kN

Design Pressure = $\frac{1003}{2.2^2}$ = 207 kN-m²

Design Moment = $\frac{207 \times 0.925^2}{2}$ = 89 kN-m

D = 425 mm B = 1000 mm

$\frac{M}{BD^2} = \frac{89 \times 10^6}{1000 \times 425^2} = 0.49$

∴ USE MIN steel - 0.15% -

Asrequired = 637.5 mm²/m

USE T16 -200 C/C E/W - 1057 mm²/m

SHEAR

PONCHING SHEAR AT COL FACE

V = 1003 kN

U = 1400 mm

$\frac{V}{UD} = \frac{1003 \times 10^3}{1400 \times 425} = 1.68$ N/mm²

$V_c = 0.8\sqrt{35} = 4.78$ N/mm²

ARUP Ove Arup & Partners Ireland
Calculation Sheet

Job No.	Sheet No.	Rev.
DS45/10	2-03	

Member/Location: FOUNDATION TO COLUMN under KH 13 4

Drg. Ref.

Job Title: GILBEY'S IRELAND LTD — NEW OFFICE EXTENSION

Made by: T.D Date: Chd.

SHEAR (CONTD)

$U = 4[350 + 3 \times 425] = 6500$ mm

$\frac{V}{UD} = \frac{1003 \times 10^3}{6500 \times 425} = 0.36$ N/mm²

$\frac{100 A_s}{BD} = \frac{100 \times 1057}{1000 \times 425} = 0.24$

$\Rightarrow v_c = 0.44$ N/mm² $\Rightarrow$ SHEAR is ok.

FLEXURAL SHEAR

$V = 0.925 \times 207 = 191$ kN

$\frac{V}{BD} = \frac{191 \times 10^3}{1000 \times 425} = 0.45$ N/mm²

cl 3.4.5.8 Enhanced SHEAR close to support

$\Rightarrow v_c = 0.44 \times \frac{2 \times 425}{425} = 0.88$ N/mm²

$\Rightarrow$ shear is not a problem

ARUP Ove Arup & Partners Ireland
Calculation Sheet

Job No.	Sheet No.	Rev.
D545/10	4-01	

Member/Location (COLUMN) C4 13 4

Drg. Ref.

Job Title: GILBEYS IRELAND LTD - NEW OFFICE EXTENSION

Made by TD Date Chd.

Design load = 1003 kN

Column size = 300 circular

Accidental moment = 0.05 N H

= 0.05 × 1003 × 0.3

= 15 kN·m

$\frac{N}{bh} = \frac{1003 \times 10^3}{300 \times 300 \times 35} = 0.31$

$\frac{M}{BH^2} = \frac{15 \times 10^6}{300 \times 300^2 \times 35} = 0.015$

COVER 45 to main BARS

$\Rightarrow \frac{h_s}{h} = \frac{210}{300} = 0.7$

⇒ USE min steel 0.4 %

⇒ Asc required = 282 mm²

USE 6 T16 - 1207 mm²

Ove Arup & Partners Ireland Calculation Sheet	Job No.	Sheet No.	Rev.
	D545/10	5-01	
	Member/Location: GROUND FLOOR SUSPENDED BETWEEN K-K2		
GILBEYS IRELAND LTD	Drg. Ref.		
Job Title: NEW OFFICE EXTENSION	Made by: TD	Date	Chd.

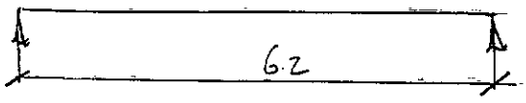

DEAD

300 Dp Slab : 0.3 x 24 = 7.2 kN-m²

characteristic Dead Load = 7.2 kN-m²

LIVE

characteristic Live Load = 6.5 kN-m²

⇒ Design Load = 1.4x7.2 + 1.6 x 6.5 = 20.5 kN-m²

Design moment = $\frac{20.5 \times 6.2^2}{8}$ = 98.5 kN-m

B = 1000 mm D = 235 mm ... 55 - cover . 4 Hr Fire

$\frac{M}{BD^2} = \frac{98.5 \times 10^6}{1000 \times 235^2} = 1.78$

$\frac{100 A_s}{BD} = 0.48$

As = 1128 mm²

Provide T20-150 C/C - 2095 mm²

DEFLECTION

$f_s = 5/8 \times \frac{1128}{2095} \times 460 = 154$ N/mm²

modification factor = $0.55 + \frac{477 - 154}{120(0.9 + 1.78)} = 1.55$

Allowable span/depth ratio = 1.55 x 20 = 31

Actual span/depth = $\frac{6.2}{0.235} = 26.3$

⇒ DEFLECTION is OK

Ove Arup & Partners Ireland Calculation Sheet	Job No. D565/10	Sheet No. 6-0.1	Rev.
Job Title: GILBEY'S IRELAND LTD NEW OFFICE EXTENSION	Member/Location: FIRST FLOOR SLAB ON GL K4		
	Drg. Ref.		
	Made by: TD	Date: 26-9-91	Chd.

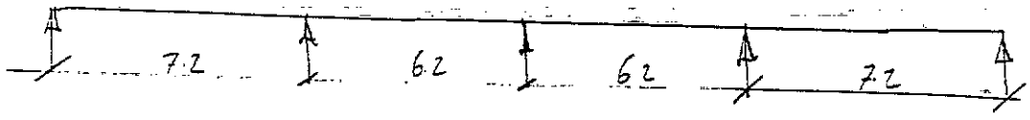

300 THK SLAB

LOADING

DEAD

300 THK SLAB = 0.3 X 24 = 7.2 kN-m²

Characteristic Dead Load = 7.2 kN-m²

LIVE

Characteristic Live Load = 6.5 kN-m²

AP+ AP102+ BEAMS (c) Oasys Ltd. 1991
Oasys AP+ BEAMS Version 6.1 BS8110

NUMBER OF SPANS & END FIXITIES

No. of SPANS..... 4

LEFT HAND END FIXITY....PINNED
RIGHT HAND END FIXITY....PINNED

SPAN LENGTHS & EI VALUES

SPAN No	LENGTH m	TYPE	EI1 kN.m2	X m	EI2 kN.m2
1	7.200	Constant	1.000E+00		
2	6.200	Constant	1.000E+00		
3	6.200	Constant	1.000E+00		
4	7.200	Constant	1.000E+00		

SPAN LOADING

DU = Dead Udl
DP = Dead Point Load
DT = Dead Triangular Load
DV = Dead Variable Load
LU = Live Udl
LP = Live Point Load
LT = Live Triangular load
LV = Live Variable Load

ENTRY No	SPAN No	LOAD TYPE	P,W,W1 kN,kN/m	X1 m	W2 kN/m	X2 m
1	1	DU	7.200			
2	2	DU	7.200			
3	3	DU	7.200			
4	4	DU	7.200			
5	1	LU	6.500			
6	2	LU	6.500			
7	3	LU	6.500			
8	4	LU	6.500			

LOAD FACTORS

Dead Load Factor... 1.40
Live Load Factor... 1.60

LOADCASE PATTERNS

Standard Loadcases to BS8110 Clause 3.2.1.2.2

AP+ (FLOOR BEAMS
Oasys AP+ BEAMS Version 6.1 BS8110

MAXIMUM ELASTIC BENDING MOMENTS & SHEAR FORCES

SPAN No	MOMENTS LH SUPPORT kN.m	+VE SPAN kN.m	RH SUPPORT kN.m	SHEAR FORCES LH SUPPORT kN	RH SUPPORT kN
1	.00	95.30	-106.38	62.58	-88.50
2	-106.38	52.03**	-45.22	73.35	-58.17
3	-45.22	52.03**	-106.38	58.17	-73.35
4	-106.38	95.30	.00	88.50	-62.58

** - Possible hogging moment throughout span, check detailed output

MAXIMUM ELASTIC REACTIONS

SUPPORT No	REACTION kN
1	62.58
2	161.86
3	107.25
4	161.86
5	62.58

GILBEYS IRELAND NEW OFFICE BUILDING
FIRST FLOOR SLAB
[illegible] D01 (1)

AP+ [illegible]2+ BEAMS
Oasys AP+ BEAMS Version 6.1 BASIC

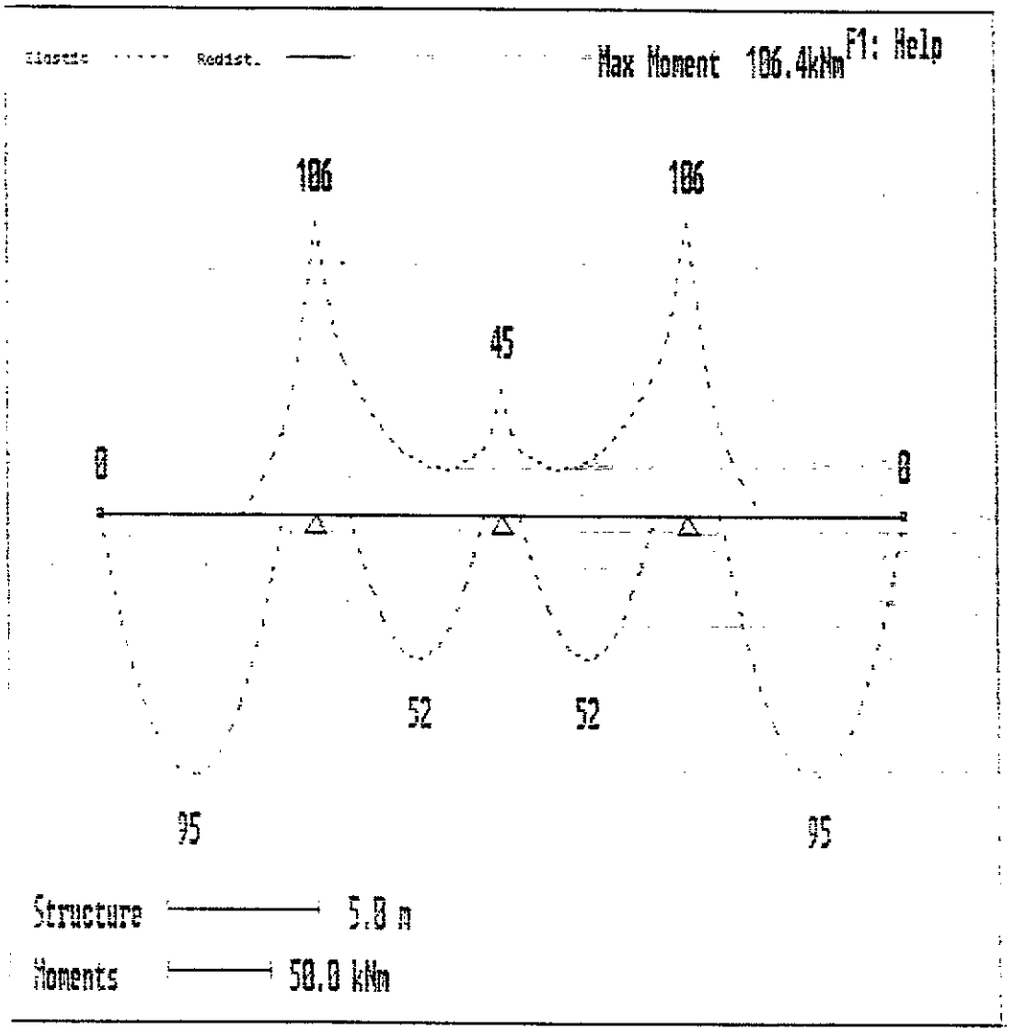

Plot Title MOMENT DIAGRAM
Sub Title Structure, Bending Moments

AP+ AP102+ BEAMS

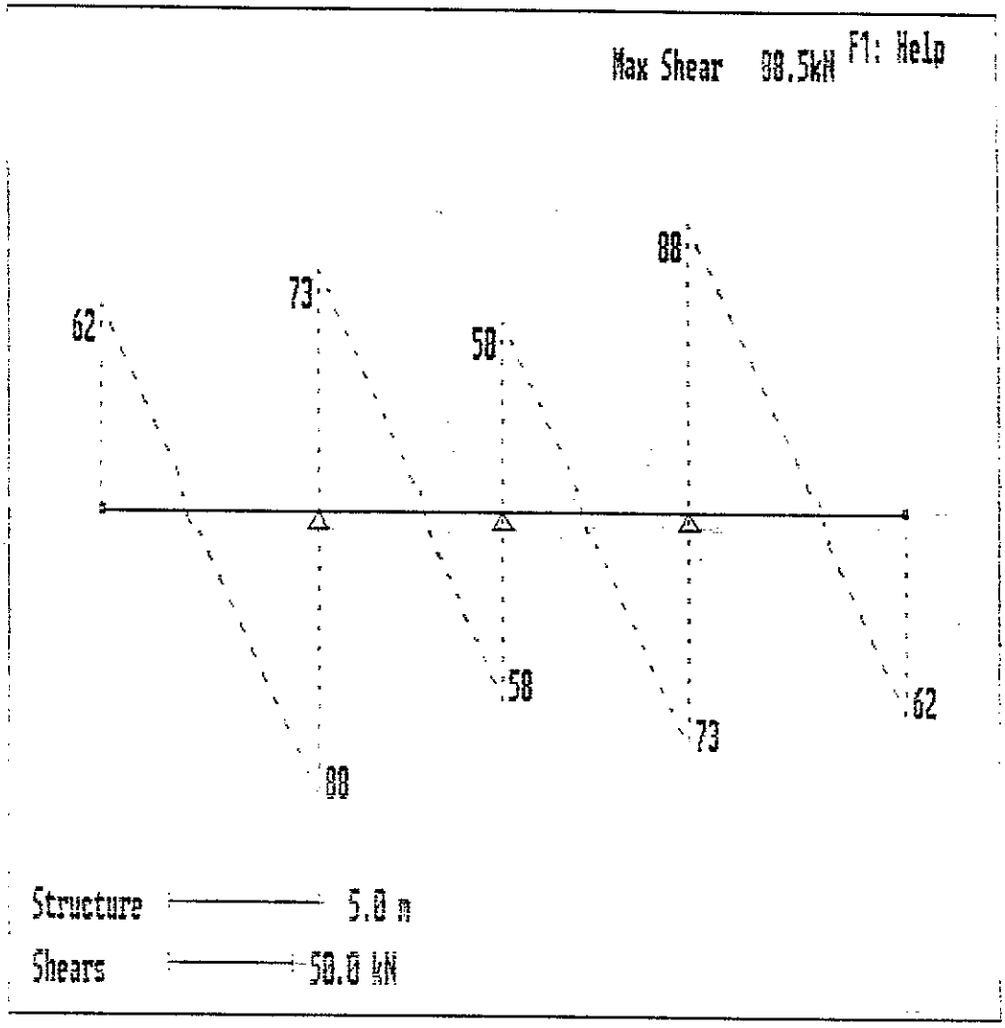

Plot Title SHEAR DIAGRAM
Sub Title Structure, Shear Forces

ARUP Ove Arup & Partners Ireland
Calculation Sheet

Job No.	Sheet No.	Rev.
DSL5/10	6-06	

Member/Location: FIRST FLOOR SLAB 00 K4
Drg. Ref.
Made by: T.D Date: 27-9-91 Chd.

Job Title: GLEEYS IRELAND LTD NEW OFFICE BUILDING

Support :

Support moment = 106 kn-m

column strip

column strip moment = 0.75x106 = 80 kn-m

B = 500 mm D = 255 mm

$\frac{M}{BD^2} = \frac{80\times10^6}{500\times255^2} = 2.46$

$\frac{100As}{BD} = 0.70$

$\Rightarrow$ As = 1785 mm²-m

INNER HALF

2/3 of steel in INNER HALF

= 1.34x1785 = 2392 mm²/m

$\Rightarrow$ T25-200

OUTER HALF

As = 1196 mm²

$\Rightarrow$ T20-200

middle strip

middle strip moment = 0.25x106 = 26.5 kn-m

B = 500 mm D = 255 mm

$\frac{M}{BD^2} = \frac{26.5\times10^6}{500\times255^2} = 0.81$

$\Rightarrow \frac{100As}{BD} = 0.22 \Rightarrow$ As =

As = 561 mm²/m. $\Rightarrow$ T16-200

Ove Arup & Partners Ireland Calculation Sheet	Job No. D545-10	Sheet No. 6-07	Rev.
	Member/Location First Floor slab no G6 K4		
GILBEY'S IRELAND LTD	Drg. Ref.		
Job Title NEW OFFICE EXTENSION	Made by TD	Date 27-9-91	Chd.

SPAN :

SPAN MOMENT = 95 kN-m

column strip

column strip moment = 0.55×95 = 52.5 kN-m

B = 500 mm D = 255 mm

$\frac{M}{BD^2} = \frac{52.5\times10^6}{500\times255^2} = 161$

$\Rightarrow \frac{100A_s}{BD} = 0.64$

$\Rightarrow A_s = 1122\ mm^2/m$

$\Rightarrow$ T16 - 150 - 1341 mm^2/m

middle strip

middle strip moment = 0.45×95 = 42.75 kN-m

B = 500 mm D = 255 mm

$\frac{M}{BD^2} = \frac{42.75\times10^6}{500\times255^2} = 132$

$\frac{100A_s}{BD} = 0.35$

$A_s = 892\ mm^2/m$

$\Rightarrow$ T16 - 200 - 1057 mm^2/m.

Ove Arup & Partners Ireland Calculation Sheet	Job No. D545/10	Sheet No. 6-08	Rev.
GILSEYS IRELAND LTD	Member/Location FIRST FLOOR SLAB ON GUKL		
Job Title NEW OFFICE EXTENSION	Drg. Ref.		
	Made by T.D	Date 4-11-91	Chd.

SHEAR AT COLUMN HEAD

$V = 161 \times 3.1 = 515$ kN

$U = 2 \times \pi \times 150 = 942$ mm

$\frac{V}{UD} \frac{515 \times 10^3}{942 \times 245} = 2.23$ N/mm² $< 0.8\sqrt{35} \Rightarrow$ ok.

SHEAR AT 1.5D FROM col HEAD

$V = 515$ kN

$U = 2340$ mm

$\frac{V}{UD} = \frac{515 \times 10^3}{2340 \times 245} = 0.89$ N/mm²

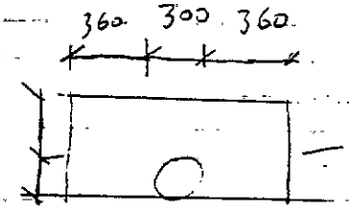

$\frac{100 A_s}{BD} = \frac{100 \times 2592}{1000 \times 245} = 0.97$

$\Rightarrow V_c = 0.71$ N/mm²

$\Rightarrow$ use mm links $= \frac{0.4 \times 2340 \times 245}{0.87 \times 460} = 573$ mm²

- T10 at 150 c/c. TO BE PLACED IN two PERIMETER - 0.5D and 1.25D FROM col FACE

SHEAR AT 4.5D

$V = 0.9 \times 515$ kN $= 463$ kN

$U = 5310$ mm

$\frac{V}{UD} = \frac{463 \times 10^3}{5310 \times 245} = 0.35$ N/mm² < 0.34 N/mm²

$\Rightarrow$ NO SHEAR Links reqd.

$\Rightarrow$ use T10 at 150 c/c at 0.5D, 1.25D, 2.0D, 2.75, 3.25 of 5 perimeters

ARUP **Ove Arup & Partners Ireland**
Calculation Sheet

Job No.	Sheet No.	Rev.
D 545/10	7-01	

Member/Location: VERTICAL WALL STIFFENERS
Drg. Ref.
Job Title: GILBEY'S IRELAND LTD - NEW OFFICE EXTENSION
Made by: TD Date: OCT 91 Chd.

WIND LOADS

BASIC WIND SPEED = 45 m/s

Topography factor = 1

Ground Roughness = 3

BUILDING HT = 10m $S_2 = 0.74$

$S_3 = 1.0$

Design Wind Speed $V_s = 0.74 \times 45 = 33.1$ m/s

$l = 136$ m
$W = 39.2$ m
$H = 8$ m

From Table 7
$C_{pe} = 0.7$
$C_{pi} = -0.2$

⇒ WIND LOAD = 0.60 kN/m²

CENTRES of STANCHIONS = 2.4 m

⇒ LOAD per STANCHION = 1.44 kN/m run

$M = \frac{1.44 \times 4.4^2}{10} = 2.78$ kN-m

$Z = \frac{2.78 \times 10^6}{165} = 168$ cm³

⇒ USE 100x50x4 RHS $Z = 28.4$ cm³

DEFLECTION

ALLOWABLE $= \frac{4.4}{3000} = 14.7$ mm

ACTUAL $= \frac{1 \times 1.44 \times 4.4 \times 4400^3}{185 \times 210 \times 142 \times 10^4} = 9.78$ mm

⇒ DEFLECTION OK

ARUP Ove Arup & Partners Ireland Calculation Sheet	Job No. D545/10	Sheet No. 7-02	Rev.
	Member/Location		
	Drg. Ref.		
GILLEY'S IRELAND LTD	Made by TO	Date OCT 91	Chd.
Job Title NEW OFFICE EXTENSION			

ASSUME THAT STABILITY TO THE BUILDING FROM 1st - ROOF IS PROVIDED BY 508 x10.0 CHS AND THAT FROM GROUND to 1st STABILITY IS PROVIDED BY the core

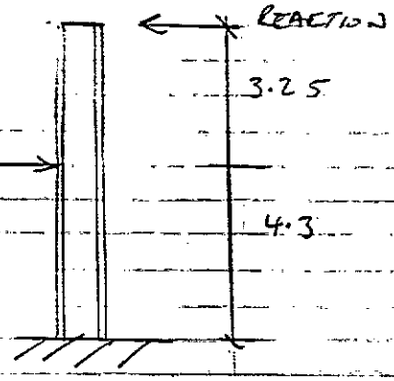

REACTION $R = 19.6 \times 0.6 \times \left(\frac{3.25}{2} + 1.5\right) = 36.75$ kN

$M_A = 36.75 \times 3.25 = 120$ kN-m

Required $Z = \frac{120 \times 10^6}{165} = 723$ cm^3

Z PROVIDED BY 2 no 508x10 CHS

$Z = 2 \times 1910$ cm^3 $= 3820$ cm^3

DEFLECTION

$\delta = \frac{36.75 \times 10^3 \times 4300^3}{12 \times 2 \times 10^5 \times 48500 \times 10^4} \times (4 \times 0.75^2 + 3 \times 0.75) = 11.38$

Allowable $\delta = \frac{3250}{250} = 13$ mm

$\therefore$ deflection is ok

RECEIPT CODE

Balance

COMHAIRLE CHONTAE ÁTHA CLIATH

DUBLIN COUNTY COUNCIL
46/49 UPPER O'CONNELL STREET,
DUBLIN 1.

BYE LAW APPLICATION.

PAID BY

CASH

CHEQUE ✓

M.O.

B.L.

I.T.

REC. No. N 47149

£595.50

Received this 27th day of August 19 91

from Scott Tallon Walker
9 Merrion Square
D. 2

the sum of five hundred and ninety one pounds fifty Pence, being balance of fee on 91A/1067

S. CAREY
Principal Officer

Cashier

Noelleen Deane

Scott Tallon Walker Architects

19 Merrion Square, Dublin 2
Telephone (01) 760621

Fax (01) 613300

Dr Ronald Tallon KSG BArch FRIAI RIBA
Niall Scott DipArch MRIAI RIBA
Michael Tallon BArch MRIAI RIBA
Joan O'Connor DipArch BArchSc MRIAI
Eugene McLernon BArch MSc MRIAI
Michael Aston DipArch RIBA
Peter Dudley BArch MRIAI RIBA
Eoin O'Morain BArch MRIAI RIBA
Bryan Roe DipArch BArchSc MRIAI

Stephen Woulfe Flanagan DipArch MRIAI
Seamus Byrne MRIAI
Brian Foley MRIAI
Frank Fahy MRIAI
Paul Mannion BArch MRIAI RIBA

Dublin County Council,
Building Control Section,
Irish Life Centre,
Lower Abbey Street,
Dublin 1.

23rd August 1991

EMCL/DT/9071

Dear Sirs,

RE: OFFICE EXTENSION AT FOX & GEESE, KNOCKMITTEN LANE, FOR GILBEYS OF IRELAND.
REG. REF. 91A/1067.

We are in receipt of your letter of the 22nd inst concerning an incorrect fee submitted in connection with the above application for approval under the Building Bye-Laws.

We regret that an error was made in calculating the fee and are enclosing a cheque in the amount of £591.50 being the amount outstanding on the total fee of £5,953.50.

Yours faithfully,

Eugene McLernon.
Scott Tallon Walker Architects.

London
10 Cromwell Place, London SW7 2JN
Telephone 071-589 4949
Fax 071-225 1005

Galway 21 Eyre Square, Galway
Telephone (091) 64881
Fax (091) 64901

Scott Tallon Walker Ltd.
Registered in Ireland No. 17474

COMHAIRLE CHONTAE ATHA CLIATH

DUBLIN COUNTY COUNCIL

File

Building Control Department,
Liffey House,
Tara Street,
Dublin 1.

Telephone: 773066

Planning Department,
Irish Life Centre,
Lower Abbey Street,
Dublin 1.

Telephone: 724755
Extension: 231/234

27th August, 1991

LOCAL GOVERNMENT (PLANNING AND DEVELOPMENT) ACTS, 1963 TO 1982

LOCATION: Western Estate, Clondalkin

PROPOSED DEVELOPMENT: Int. Alts.

APPLICANT: R. & A. Bailey & Co. Ltd.

PLANNING REG.REF.: 91A/1067

DATE OF RECEIPT OF SUBMISSION: ~~20~~th 15th August, 1991

A Chara,

With reference to above, I acknowledge receipt of application for:

Building Bye-Law Approval

Mise, le meas

A. Smith

PRINCIPAL OFFICER

Scott Tallon Walker,

19 Merrion Square,

Dublin 2.

COMHAIRLE CHONTAE ATHA CLIATH

DUBLIN COUNTY COUNCIL

Building Control Department,
Liffey House,
Tara Street,
Dublin 1.

Telephone: 773066

Planning Department,
Irish Life Centre,
Lower Abbey Street,
Dublin 1.

Telephone: 724755
Extension: 231/234

27th August, 1991

LOCAL GOVERNMENT (PLANNING AND DEVELOPMENT) ACTS, 1963 TO 1982

LOCATION: Western Estate, Clondalkin

PROPOSED DEVELOPMENT: 2 storey office extension

APPLICANT: R. & A. Bailey & Co. Ltd.

PLANNING REG.REF.: 91A/1067

DATE OF RECEIPT OF SUBMISSION: 9th August, 1991

A Chara,

With reference to above, I acknowledge receipt of application for:

Building Bye-Law Approval

Mise, le meas

A. Smith

PRINCIPAL OFFICER

Scott Tallon Walker,

19 Merrion Square,

Dublin 2.

DUBLIN COUNTY COUNCIL

Tel. 72[redacted]55 (ext. 262/264)

PLANNING DEPARTMENT,
BLOCK 2,
IRISH LIFE CENTRE,
LR. ABBEY STREET,
DUBLIN 1.

Notification of Decision to Grant Permission/[redacted]
Local Government (Planning and Development) Acts, 1963-1983

To: Scott Tallon Walker Architects,
19, Merrion Square,
Dublin 2.

Decision Order Number and Date: P/3926/91 - 23.08.1991

Register Reference No.: 91A/1067

Planning Control No.:

Application Received on: 27.06.1991

Applicant: Gilbeys of Irl. (Manufacturing) Ltd.

In pursuance of its functions under the above-mentioned Acts, the Dublin County Council, being the Planning Authority for the County Health District of Dublin, did by Order dated as above make a decision to grant Permission/[redacted] for:-

2 storey office extension to the manufacturing/warehouse plant of R. & A. Bailey & Co. Ltd. at Western Estate, Clondalkin.

SUBJECT TO THE FOLLOWING CONDITIONS

CONDITIONS	REASONS FOR CONDITIONS
1. The development to be carried out in its entirety in accordance with the plans, particulars and specifications lodged with the application, save as may be required by the other conditions attached hereto.	1. To ensure that the development shall be in accordance with the permission and that effective control be maintained.
2. That before development commences, approval under the Building Bye-Laws be obtained, and all conditions of that approval be observed in the development.	2. In order to comply with the Sanitary Services Acts, 1878-1964.
3. That the requirements of the Supervising Environmental Health Officer be ascertained and strictly adhered to in the development.	3. In the interest of health.
4. That the requirements of the Chief Fire Officer be ascertained and strictly adhered to in the development.	4. In the interest of safety and the avoidance of fire hazard.
5. That the water supply and drainage arrangements, including the disposal of surface water, be in accordance with the requirements of the County Council.	5. In order to comply with the Sanitary Services Acts 1878-1964.

Signed on behalf of the Dublin County Council: Rose Fenny
For Principal Officer

Date: 23rd August, 1991.

IMPORTANT: Turn overleaf for further information

CONDITIONS	REASONS FOR CONDITIONS
6. That off-street car parking facilities and parking for trucks be provided in accordance with the Development Plan Standards.	6. In the interest of the proper planning and development of the area.
7. That no advertising sign or structure be erected, except those which are exempted development, without prior approval of the Planning Authority.	7. In the interest of the proper planning and development of the area.
8. That a financial contribution in the sum of £13,733. be paid by the proposer to the Dublin County Council towards the cost of provision of public services in the area of the proposed development and which facilitate this development; this contribution to be paid before the commencement of development on the site.	8. The provision of such services in the area by the Council will facilitate the proposed development. It is considered reasonable that the developer should contribute towards the cost of providing the services.

NOTE:

If there is no appeal to An Bord Pleanala against this decision PERMISSION/APPROVAL will be granted by the Council as soon as may be after the expiration of the period for the taking of such appeal. If every appeal made in accordance with the Acts has been withdrawn, the Council will grant the PERMISSION/APPROVAL after the withdrawal.

An appeal against the decision may be made to An Bord Pleanala. The applicant may appeal within one month from the date of receipt by him of this notification. ANY OTHER PERSON may appeal within twenty-one days beginning on the date of the decision.

An appeal shall be in writing and shall state the subject matter and grounds of the appeal. It should be addressed to:—

An Bord Pleanala, Blocks 6 and 7, Irish Life Centre, Lower Abbey Street, Dublin 1.

(1) An appeal lodged by an applicant or his agent with An Bord Pleanala will be invalid unless accompanied by a fee of £36 (Thirty-six Pounds). (2) A party to an appeal making a request to An Bord Pleanala for an Oral Hearing of an appeal must, *in addition* to (1) above, pay to An Bord Pleanala a fee of £36 (Thirty-six Pounds). (3) A person who is not a party to an appeal must pay a fee of £10 (Ten Pounds) to An Bord Pleanala when making submissions or observations to An Bord Pleanala in relation to an appeal.

Approval of the Council under Building Bye-Laws must be obtained and the terms of the approval must be complied with in the carrying out of the work before any development which may be permitted is commenced.

FUTURE PRINT LTD.

Scott Tallon Walker Architects

19 Merrion Square, Dublin 2
Telephone (01) 760621

Fax (01) 613300

Dr Ronald Tallon KSG BArch FRIAI RIBA
Niall Scott DipArch MRIAI RIBA
Michael Tallon BArch MRIAI RIBA
Joan O'Connor DipArch BArchSc MRIAI
Eugene McLernon BArch MSc MRIAI
Michael Aston DipArch RIBA
Peter Dudley BArch MRIAI RIBA
Eoin O'Morain BArch MRIAI RIBA
Bryan Roe DipArch BArchSc MRIAI

Stephen Woulfe Flanagan DipArch MRIAI
Seamus Byrne MRIAI
Brian Foley MRIAI
Frank Fahy MRIAI
Paul Mannion BArch MRIAI RIBA

Dublin County Council,
Building Control Department,
Irish Life Centre,
Lower Abbey Street,
Dublin 1.

14th August 1991

EMCL/DT/9145

BBL

Dear Sirs,

RE: PROPOSED INTERNAL MODIFICATIONS TO R. & A. BAILEY FACTORY, NANGOR ROAD, WESTERN INDUSTRIAL ESTATE, DUBLIN 12.

We herewith are applying on behalf of our client, Gilbeys of Ireland (Manufacturing) Limited, for approval under the Building Bye-Laws for modifications to the manufacturing area of the above plant. In connection with this application, we enclose the following documents in duplicate:-

a) Architectural Drawing Nos. 9145 / 9, 10, 12, 13, 14, 15.

b) Structural Drawing Nos. 0545/11 D2, D3, 6.01, 6.02.

c) Structural Design Certificate.

d) Scope of Work and Outline Specification.

e) Cheque for fee in the sum of £70.00 (alterations to existing building).

We trust that you will find the above information adequate for your needs and we would much appreciate an early decision on this application as our client is embarking on a very complex transfer of manufacturing plant.

Yours faithfully,

15. AUG 91

Eugene McLernon.

Eugene McLernon.
Scott Tallon Walker Architects.

Encl.

91A/1007
2 20.2.

London
10 Cromwell Place, London SW7 2JN
Telephone 071-589 4949
Fax 071-225 1005

Galway 21 Eyre Square, Galway
Telephone (091) 64881
Fax (091) 64901

Scott Tallon Walker Ltd.
Registered in Ireland No. 17474

RECEIPT CODE

COMHAIRLE CHONTAE ÁTHA CLIATH

DUBLIN COUNTY COUNCIL
46/49 UPPER O'CONNELL STREET,
DUBLIN 1.

BYE LAW APPLICATION

PAID BY

CASH

CHEQUE

M.O.

B.L.

REC. No. N 47063

£300

Received this 14th day of August 19

from Earl Fitton Walter
19 Merrion Square

the sum of Twenty Pounds

Pence, being

for Bye Law Application

Cashier

ASST. CASHIER
Finance Office

D E S I G N C E R T I F I C A T E

for

GILBEYS OF IRELAND

ALTERATIONS TO MANUFACTURING AREA

This is to certify that the design, calculations and drawings for the loadbearing elements of the above construction and the preparation of the specification for the materials to be used have been executed by or under the direct supervision of the Chartered Engineer for the Project named above. These are in conformity with current engineering standards, in particular the relevant Standards or Codes of Practice prepared by the Institute for Industrial Research & Standards (Ireland), the Building Research Station (Great Britain), the British Standards Institution, the Institution of Civil Engineers and Structural Engineers (Great Britain)

Project Engineer : Donal Hutchinson
Qualifications : BE CEng MIStructE

Signed : Donal Hutchinson

Donal Hutchinson
Executive Director

OVE ARUP & PARTNERS IRELAND,
Consulting Engineers,
10 Wellington Road,
Ballsbridge,
DUBLIN 4.

14th August 1991

GILBEYS OF IRELAND (MANUFACTURING) LIMITED,

SCOPE OF WORKS AND SPECIFICATION

FOR

MODIFICATIONS TO EXISTING MANUFACTURING AREA

OF

R. & A. BAILEY FACTORY

TO ACCOMMODATE

NEW CONTINUOUS PROCESS MANUFACTURING EQUIPMENT.

SCOTT TALLON WALKER ARCHITECTS,

19, MERRION SQUARE,

DUBLIN 2.

AUGUST 1991.

1. Scope of Work:

1.1 The proposed work is being undertaken to facilitate the installation of a new continuous process manufacturing plant for the production of Baileys Cream Liqueur. The work area is confined within the zone originally allocated to the manufacturing process at the Nangor Road plant. Because of operational policy to date, the manufacturing process, as originally planned, has not been carried on at this plant. Planned changes in production now require the necessary work to be done to enable the manufacturing process to commence as originally intended.

1.2 The proposed work comprises alterations to existing elements of external walling, internal walling, floors, doors, drainage, ceilings and M. & E. services as presently installed in the product manufacturing section of the plant. Reference to STW Drawing No. 9145 / 10 shows the layout of the manufacturing area as existing while Drawing No. 9145 / 12 shows the extent of the proposed alterations.

1.3 The principal work to be carried out involves the demolition of a substantial amount of existing blockwork walling and the replacement of some of this walling to a new configuration. This work will necessitate the making good of floor tiling adjacent to and under removed walls and the relaying of tiling in the vicinity of new

walls. In addition new bounded areas will be required for the containment of spillage as will be modifications to the existing drainage system to provide drainage from the bunded area.

1.4 During the execution of the work the contractor will have unimpeded access to the manufacturing and ingredients area but will be required to take all necessary precautions to prevent damage to existing surfaces, finishes and building services.

1.5 The client will require to have use of and to continue with the production operation associated with the Tonk Room during the contract period. To ensure that this area remains undisturbed and in order to keep it clean, it will be necessary to erect a temporary air tight screen in the Tank room before demolition work commences.

1.6 The contractor appointed shall be responsible for fully co-ordinating all work in connection with removal, modification, and re-commissioning of the existing building services as is required to facilitate the proposed changes.

2. <u>Description of the Works:</u>

2.1 Walls.

Provide screen wall 11000 high parallel to G.L. 8 comprising timber studs with 2400 high plywood base

lining and heavy duty polythene tabed as required over to form air tight seal with roof deck.

2.1.1 The designated area is 6 - 8, J - L of the existing manufacturing area at the South West corner of the building. Demolish all internal 190mm blockwork walling as shown.

2.1.2 The new walls shall be built with 190mm thick solid fairfaced dense concrete masonry blocks in panels set between steel stiffeners at 2.4m centres to match existing similar walls in the factory. Steel removed from existing walls to be modified and reused.

2.1.3 New concrete strip foundations, to engineers specification and details, will be poured to support the new walls. To facilitate this, the existing concrete floor slab and D.P.M. will be cut back and subsequently made good.

2.1.4 Door opes in the walls shall be fitted with steel flush doors and frames and shall conform to the requirements of B.S. 476 Part 8 1972 for doors required to have a period of fire resistance of two hours.

2.1.5 Door openings in the external walls of the manufacturing area shall be such so as to maintain compliance with the fire officers requirements regarding the number of escape routes from the area. The spirit store plant area shall

have its own independent emergency escape doors.

2.1.6 Block up 2 No. personell doors on G.6 and L. Allow for facing with G.R.C. cladding to be provided from stock by Client.

2.2 <u>Floor</u>

2.2.1 The existing floor comprises a 150mm thick reinforced concrete slab on a 1000g visqueen d.p.m. on blinding on hardcore and has been designed by the Engineers to support loads up to 1000 lbs/sq. ft. which is in excess of those that will be applied in the manufacturing area.

2.2.2 All of the manufacturing floor area is tiled with "Hoganos" H.D. ceramic floor tiles with acid resisting grout. All tiles floors are laid to falls to facilitate drainage via stainless steel gullies and linear grids. Where walls are removed the floor tiling shall be reinstated to form a continuous floor. In other areas where new work disturbs the floor finish the tiles shall be made good or replaced.

2.2.3 New floor drains as indicated shall discharge into new roddable trapped outlets which shall be connected to an existing 150 O p.v.c. effluent drain in this vicinity.

2.2.4 A bunded area will be formed around the Spirit store to contain any spillages that may occur. The bunded area

shall be rendered with a non solvent based epoxy coating. Bunding shall also be formed around C.I.P. and as indicated on the layout drawings.

2.2.5 Other bounded areas 200 high to be formed as indicated on the layout drawings. All bund walls to be fully tiled. Drainage to be provided as indicated.

2.3 <u>Ceiling and Roof:</u>

2.3.1 In the Tank Room a new suspended ceiling shall be erected below the level of the existing steel space frame roof structure where the room has been extended. This ceiling to match the existing sprayed fibrous plaster 2 hour ceiling in all respects.

2.3.2 The ceiling shall have incorporated into it an additional smoke vent which will be fitted with an automatic opening device in the event of a fire. This will entail cutting an ope in the existing steel roof deck with subsequent trimming around and forming a flashed upstand to the existing roofing which comprises slate granules on waterproof membrane on 50 insulation on vapour barrier on metal decking.

2.4 Services:

2.4.1 Electrical Installation.

All electric motors, light fittings etc. within the Spirit Store area shall be flame proof. All of the electrical installation shall be carried out in accordance with the following:

a) The current issue of the regulations issued by the Institute of Electrical Engineers.

b) All relevant sections of the British Standards Code of Practice.

c) The regulation of the Electricity Supply Board.

2.4.2 Sprinkler Installation.

The Spirit Store shall be protected by a sprinkler system at three levels namely the void between the new ceiling and roof deck, below new ceiling level and below the steel access platform to the Spirit storage tanks. The ceiling void area will be protected by the existing sprinkler system already installed at roof level in the warehouse. The remainder of the area to be covered shall be an extension of the existing installation the design of which shall be carried out by a specialist firm and it shall conform to both the requirements of the Fire Officer and the Client's Insurance Company.

2.4.3 Mechanical Installation.

Ventilation shall be provided to the Spirit store by new roof mounted extract fans with make up air being supplied via new transfer grilles from the exterior. The wall grilles shall have 2 hour fire dampers incorporated into them.

The area will be fitted with a gas detection system which will automatically activate the extract system in the event of a spillage from the spirit holding tanks.

2.4.4 Effluent treatment.

The effluent arising from the new production and cleaning process will be carried by the existing effluent drainage to the existing treatment plant before discharge into the public sewer. The volume of effluent generated will necessitate the upgrading of the designed capacity of the existing treatment system. This upgrading work will be carried out under separate contract.

3. MATERIAL SPECIFICATION

3.1 Blockwork.

The walls shall be built with 390 x 190 x 190 Forticrete fairfaced dense concrete masonry blockwork and the blocks shall comply with B.S. 2028, 1364 ; 1968.

3.2 Mortar.

The mortar mix for the blockwork shall be 1 part cement, 2 parts lime and 9 parts sand. Cement shall be ordinary Portland cement conforming with I.S. 1 or B.S. 12. Lime shall be non hydraulic or semi-hydraulic and shall comply with B.S. 890 : 1966 and be prepared in accordance with Clause 504 of B.S.C.P. 121, 101, 1951. Sand shall be of best quality and shall comply with B.S. 1200 : 1965 and shall be well graded 5mm down in accordance with table 10 therein. The water shall be of potable quality free from impurities.

3.3 Steelwork.

All of the steelwork shall be as specified and detailed by the Structural Engineer. Steelwork generally shall satisfy the requirement of B.S. 4360. The design of the steelwork details shall conform to B.S. 449 Part 2 and B.S. 4606 Part 1. Welding shall be carried out in accordance with the current B.S. 1856. High strength friction grip bolts shall conform to B.S. 4395.

3.4 Concrete.

The concrete for the new stip foundations and flooring shall all be as specified and detailed by the structural engineer.

3.5 Drainage.

Floor drains shall be proprietary 316 quality stainless steel roddable type with 50mm deep seal.

Pipework shall be 100 Ø pvc conforming to B.S. 4660 : 1973 and shall be encased in 150mm concrete surround. The concrete shall have flexible joints at all pipe coupling.

3.6 Floor tiling.

Floor tiles shall be unglazed extruded ceramic tiles to match those used elsewhere in the factory. The tiles shall be bedded using the semi-dry technique as specified by the Manufacturer's and shall be pointed with an acid resisting grout.

3.7 Painting and Decoration.

Steelwork to be painted with intumescent paint to give required 2 hour fire rating. Paint to be Hamron and to be applied strictly in accordance with Manufacturer's recommendations. A cosmetic overcoat of paint shall be applied subsequent to the intumescent paint build up and this shall consist of two no. costs of chlorinated rubber M.I.O. applied by brush to 50 microns dry film thickness per coat.

Scott Tallon Walker Architects.

August 1991.

Scott Tallon Walker Architects

19 Merrion Square, Dublin 2
Telephone (01) 760621

Fax (01) 613300

Dr Ronald Tallon KSG BArch FRIAI RIBA
Niall Scott DipArch MRIAI RIBA
Michael Tallon BArch MRIAI RIBA
Joan O'Connor DipArch BArchSc MRIAI
Eugene McLernon BArch MSc MRIAI
Michael Aston DipArch RIBA
Peter Dudley BArch MRIAI RIBA
Eoin O'Morain BArch MRIAI RIBA
Bryan Roe DipArch BArchSc MRIAI

Stephen Woulfe Flanagan DipArch MRIAI
Seamus Byrne MRIAI
Brian Foley MRIAI
Frank Fahy MRIAI
Paul Mannion BArch MRIAI RIBA

Dublin County Council,
Building Control Section
Irish Life Centre,
Lower Abbey Street,
Dublin 1.

DUBLIN COUNTY COUNCIL
Planning Dept. Registry Section
APPLICATION RECEIVED
09 AUG 1991
REG No. 91A/1067

8th August 1991.

EMcL/9071/AG.

Dear Sirs,

RE: PROPOSED OFFICE EXTENSION TO R. & A. BAILEY PLANT AT FOX AND GEESE, KNOCKMITTEN LANE, DUBLIN 12.

On behalf of our Client, Gilbeys of Ireland (Manufacturing) Limited, we enclose herewith two copies of the following documents in connection with an application for Building Bye-Law Approval. An application for Planning Permission for this proposal was made on the 25th June 1991.

(a) Architects Drawings Nos. 9071 / 01, 02, 03, 04, 05, 06, 07, 08, 09, 11, 12, 14, 18 and 19.

(b) Outline specification.

(c) Engineers Drawings Nos. D545 / 10 D1, S/L/B01 S/L/G01 S/L/101 S/L/201 S/L/301.

(d) Engineers Design Certificate.

(e) Copy of Planning Application form.

(f) Cheque for fee in the amount of £5,362.00

BYE LAW APPLICATION.
REC. No. N47006
£5362.00

We trust that the above information is satisfactory and that you will be able to reach an early decision on this application as our client is most anxious to commence work on this project.

Yours faithfully,

Eugene McLernon.

Eugene McLernon.
Scott Tallon Walker Architects.

9/8 91A/1067
BBZ.
2.4.2.

Encl.

London
10 Cromwell Place, London SW7 2JN
Telephone 071-589 4949
Fax 071-225 1005

Galway 21 Eyre Square, Galway
Telephone (091) 64881
Fax (091) 64901

Scott Tallon Walker Ltd.
Registered in Ireland No. 17474

DESIGN CERTIFICATE

for

GILBEYS OF IRELAND

NANGOR ROAD EXTENSION

This is to certify that the design, calculations and drawings for the loadbearing elements of the above construction and the preparation of the specification for the materials to be used have been executed by or under the direct supervision of the Chartered Engineer for the Project named above. These are in conformity with current engineering standards, in particular the relevant Standards or Codes of Practice prepared by the Institute for Industrial Research & Standards (Ireland), the Building Research Station (Great Britain), the British Standards Institution, the Institution of Civil Engineers and Structural Engineers (Great Britain)

Project Engineer : Donal Hutchinson

Qualifications : BE CEng MIStructE

Signed : _____

Frank Lydon
Chairman

OVE ARUP & PARTNERS IRELAND,
Consulting Engineers,
10 Wellington Road,
Ballsbridge,
DUBLIN 4.

6th AUGUST 1991

RECEIPT CODE

COMHAIRLE CHONTAE ÁTHA CLIATH

DUBLIN COUNTY COUNCIL

46/49 UPPER O'CONNELL STREET,

DUBLIN 1.

receipt is not an issue of title

tendered in BYE LAW APPLICATION fee.

REC. No. N 47006

PAID BY

CASH

CHEQUE

M.O.

B.L.

£5362.00

Received this 9th day of August 19 91

from Gilboys of Ireland Ltd

the sum of Five thousand three hundred and sixty two Pounds

Pence, being Bye L

bl application at Fox Geese, Knocknalee Lane, D.12

Michael O'Hara Cashier

S. CAREY
Principal Officer

Class C

D E S I G N C E R T I F I C A T E

for

GILBEYS OF IRELAND

NANGOR ROAD EXTENSION

This is to certify that the design, calculations and drawings for the loadbearing elements of the above construction and the preparation of the specification for the materials to be used have been executed by or under the direct supervision of the Chartered Engineer for the Project named above. These are in conformity with current engineering standards, in particular the relevant Standards or Codes of Practice prepared by the Institute for Industrial Research & Standards (Ireland), the Building Research Station (Great Britain), the British Standards Institution, the Institution of Civil Engineers and Structural Engineers (Great Britain)

Project Engineer : Donal Hutchinson

Qualifications : BE CEng MIStructE

Signed : F.J. Lydon

Frank Lydon
Chairman

OVE ARUP & PARTNERS IRELAND,
Consulting Engineers,
10 Wellington Road,
Ballsbridge,
DUBLIN 4.

6th AUGUST 1991

OUTLINE SPECIFICATION

OFFICE EXTENSION

TO

R. & A. BAILEY

FOR

GILBEYS OF IRELAND (MANUFACTURING) LIMITED.

SCOTT TALLON WALKER / ARCHITECTS,

19, MERRION SQUARE,

DUBLIN 2.

JUNE 1991.

1. **General Description.**

The proposed work comprises the provision of a two storey office building adjoining the existing office area at the R. & A. Bailey manufacturing plant. The new office block is located within the zone designated for expansion in the original scheme. The external walling and treatment of the new building is similar to the existing and is designed to read as a fully integrated extension. The principal difference is that the new building is not air conditioned and will incorporate opening windows and sun screening on the South elevation.

2. **Site.**

The site is located between the Grand Canal and the new Nangor Road at Fox and Geese, as indicated on the site location plan. The area of the site is twenty two acres and the existing building completed in 1983 is fully landscaped.

3. **Planning.**

The building is two stories high and is rectangular in plan form. Entry is via the main reception lobby of the existing building. Since the administrative function served is different from that of the existing, the new building will operate as a fully self contained unit. The ground floor contains reception, waiting, conference, office and laboratory space while the split level first floor area with partial sloped glazed over the centre area contains senior personnel offices, conference room and associated facilities. The building is based on a 1200 square planning

grid with a basic structural bay of 7200 x 5600.

4. **Structure.**

The structural system is based on that developed for the original building but has been simplified for economic reasons. Because large clear spans are not required the original space frame roof system has been abandoned in favour of a simple steel beam system supported on concrete columns. These columns also support the concrete flate slab first floor on the basic 7200 x 5600 grid mentioned above.

5. **Foundations.**

Ground conditions are good and the reinforced concrete structure will be founded on a series of pads for columns and strip foundations for walls.

6. **Cladding.**

The building will be clad with a flush external skin comprising a combination of cream coloured G.R.C. panels with double glazing in brown Syntha-Pulvin finished thermally broken aluminium framed windows. The panel size and treatment will be similar to the existing building except that opening sashes will be incorporated into the window system.

7. **Landscaping.**

Minor modification to the existing fully developed landscape treatment will be made to accommodate the new building.

8. **Water Supply.**

It is proposed to service the development by a branch connection from the existing 150 mm diameter water ring main serving the existing development. The existing fire hydrants will provide adequate cover for the extension.

9. **Drainage.**

The proposed building will not generate noxious effluent. Domestic sewage will be piped to the existing foul drain from the existing building. In addition rain water from the roof and surface water will discharge into the existing surface water drains.

10. **M. & E. Services.**

Mechanical and Electrical services will be provided as an extension of the power and hot water supplies to the existing building. Both electrical cabling and pipe sizes have been accommodated to cater for the proposed extension. A roof plant room will accommodate the main items of plant together with water storage.

Scott Tallon Walker Architects 19 Merrion Square Dublin 2 telephone 760621 fax 613300

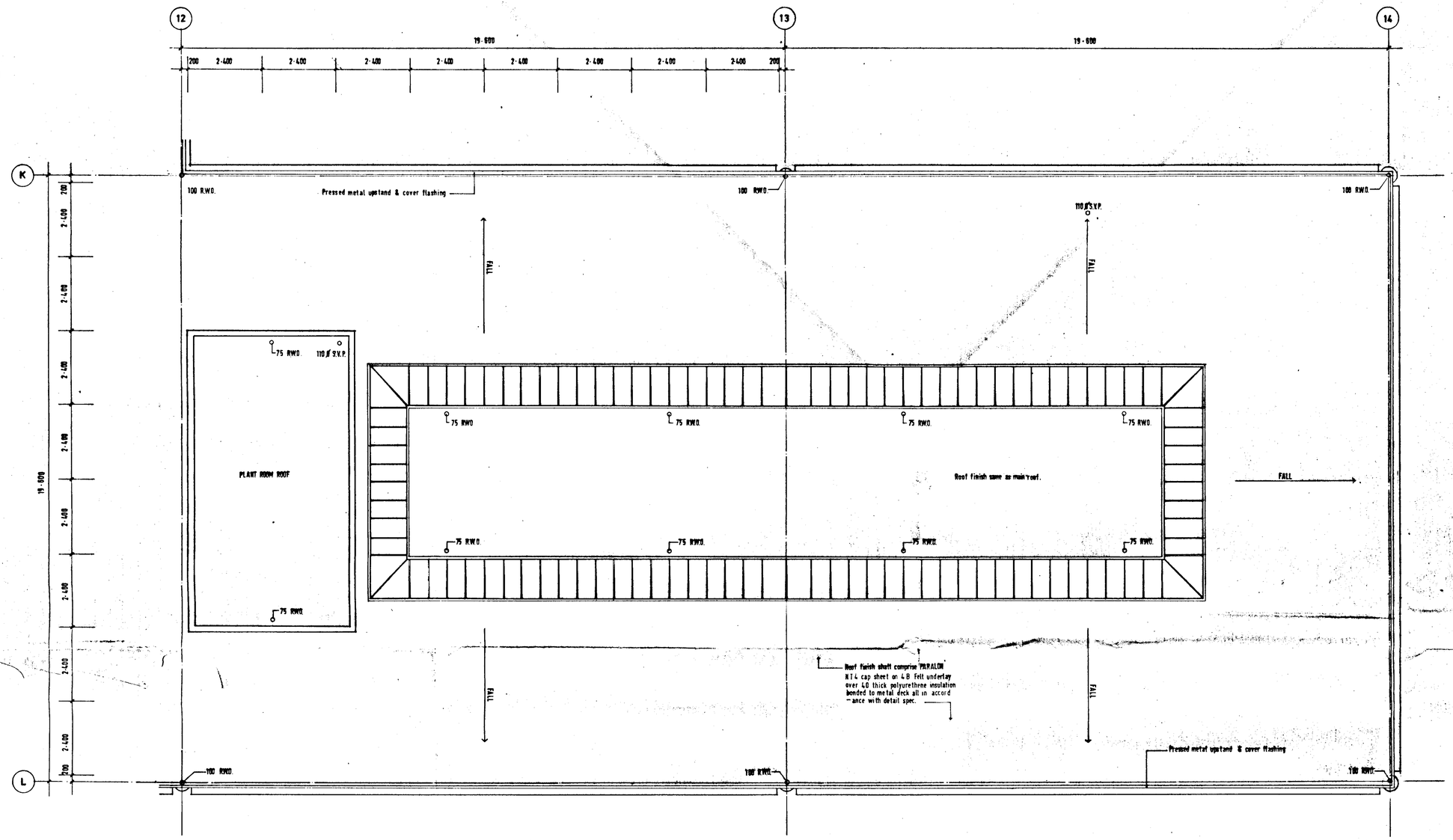

ROOF PLAN

CLIENT GILBEYS OF IRELAND (MANUF) LTD.	JOB NEW OFFICE BUILDING	JOB Nº	9071
SITE NANGOR RD., CLONDALKIN	POSITION	DRG Nº	07
DRAWING ROOF PLAN	SCALE 1:75	REVISION	DATE JULY 1991

/ / /F
/ / /E
/ / /D
/ / /C
/ / /B
/ / /A

cott Tallon Walker Architects 19 Merrion Square Dublin 2 telephone 760621 fax 613300

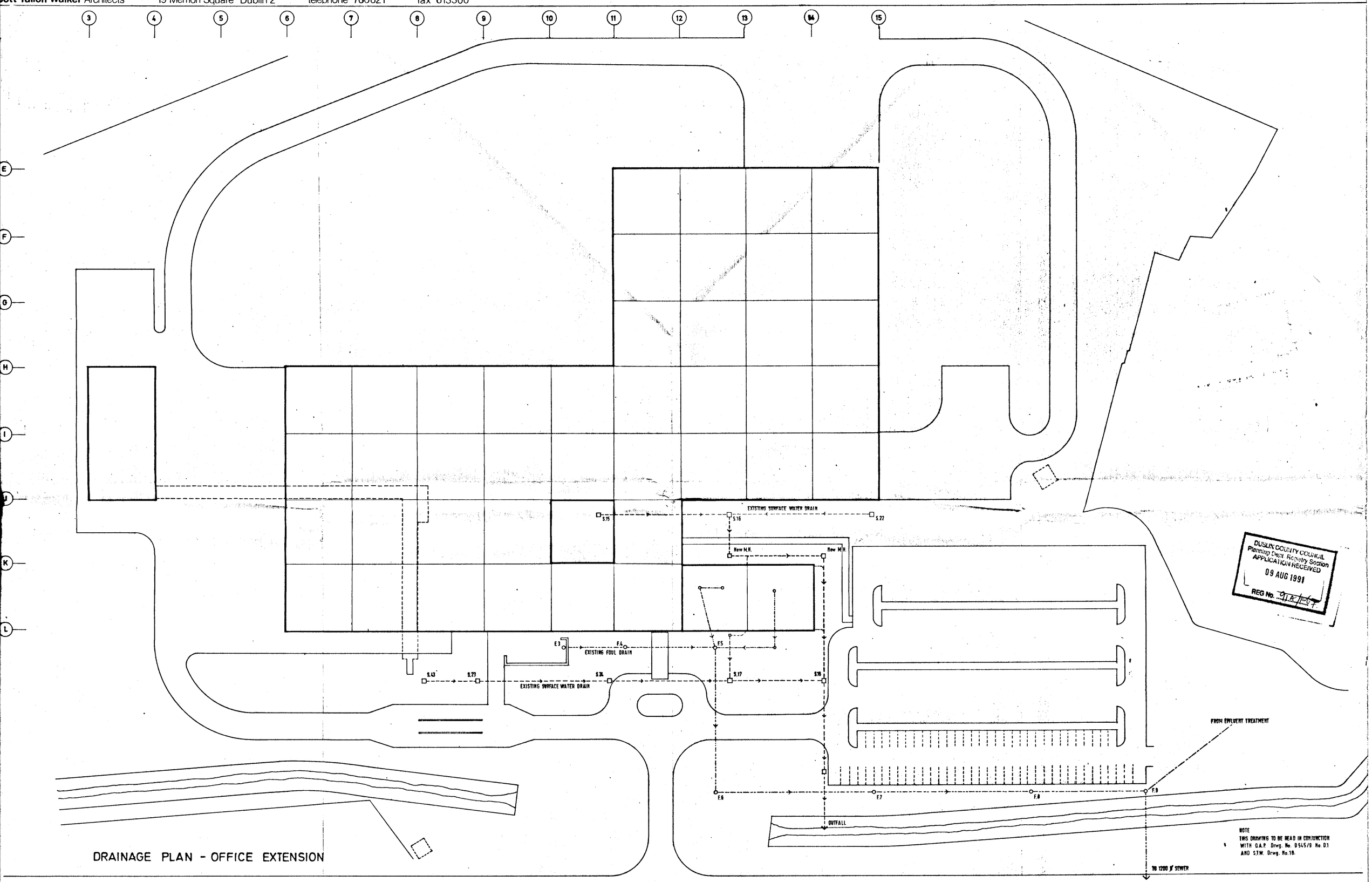

DRAINAGE PLAN - OFFICE EXTENSION

NOTE
THIS DRAWING TO BE READ IN CONJUNCTION WITH O.A.P. Drwg. No. 0545/9 No. 01 AND S.T.W. Drwg. No.18.

/ / /F	CLIENT GILBEYS OF IRELAND (MANUF) LTD.	JOB NEW OFFICE BUILDING		JOB Nº	9	0	7	1
/ / /E								
/ / /D	SITE NANGOR RD. CLONDALKIN	POSITION		DRG Nº			0	2
/ / /C								
/ / /B	DRAWING EXTERNAL DRAINAGE LAYOUT		SCALE 1 500	REVISION		DATE JULY 1991		
/ / /A								

Scott Tallon Walker Architects 19 Merrion Square Dublin 2 telephone 760621 fax 613300

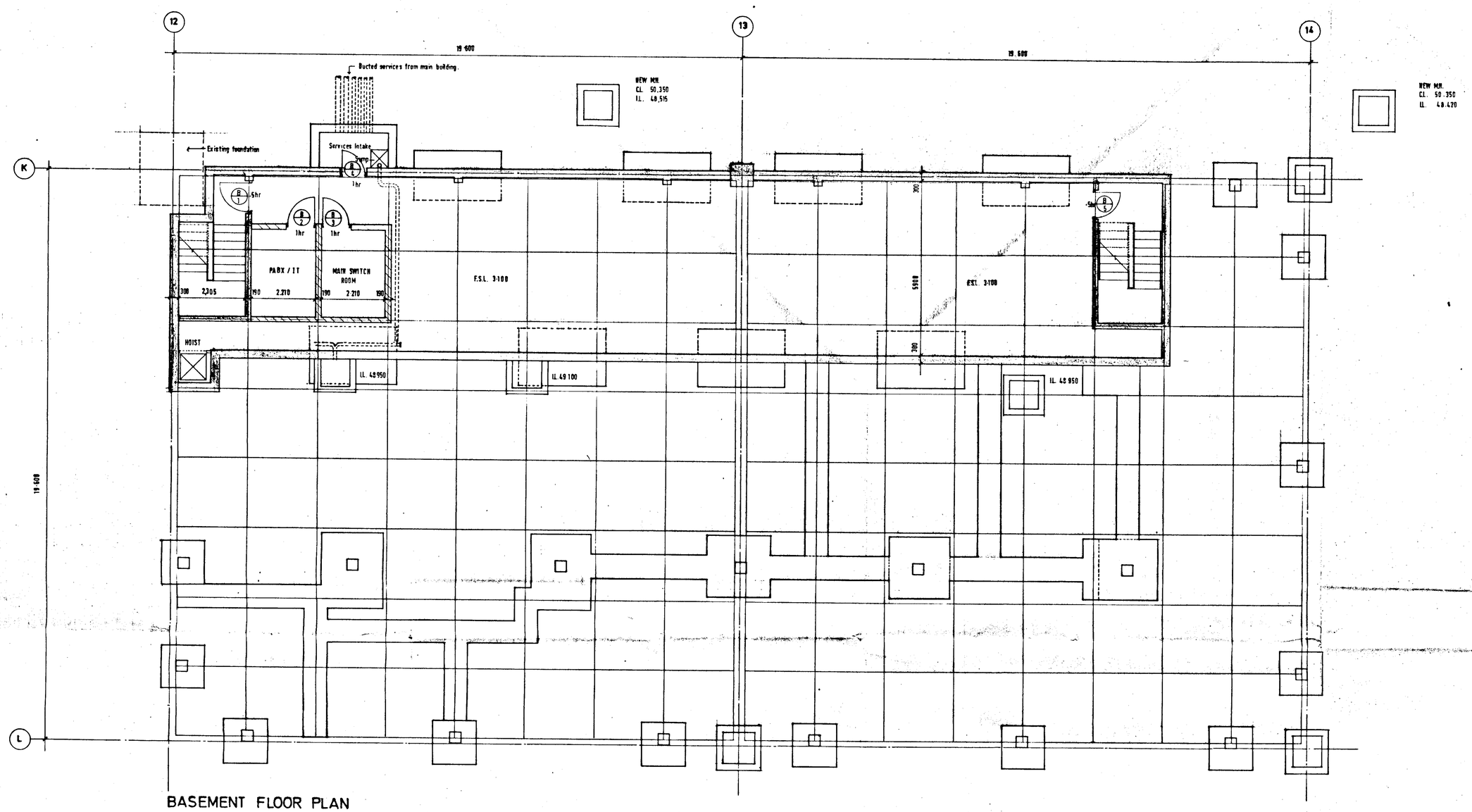

BASEMENT FLOOR PLAN

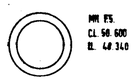

/ / /F	CLIENT GILBEYS OF IRELAND (MANUF) LTD.	JOB NEW OFFICE BUILDING		JOB Nº	9	0	7	1
/ / /E								
/ / /D	SITE NANGOR RD, CLONDALKIN	POSITION		DRG Nº			0	3
/ / /C								
/ / /B	DRAWING BASEMENT PLAN		SCALE 1:75	REVISION		DATE JULY 1991		
/ / /A								

ott Tallon Walker Architects 19 Merrion Square Dublin 2 telephone 760621 fax 613300

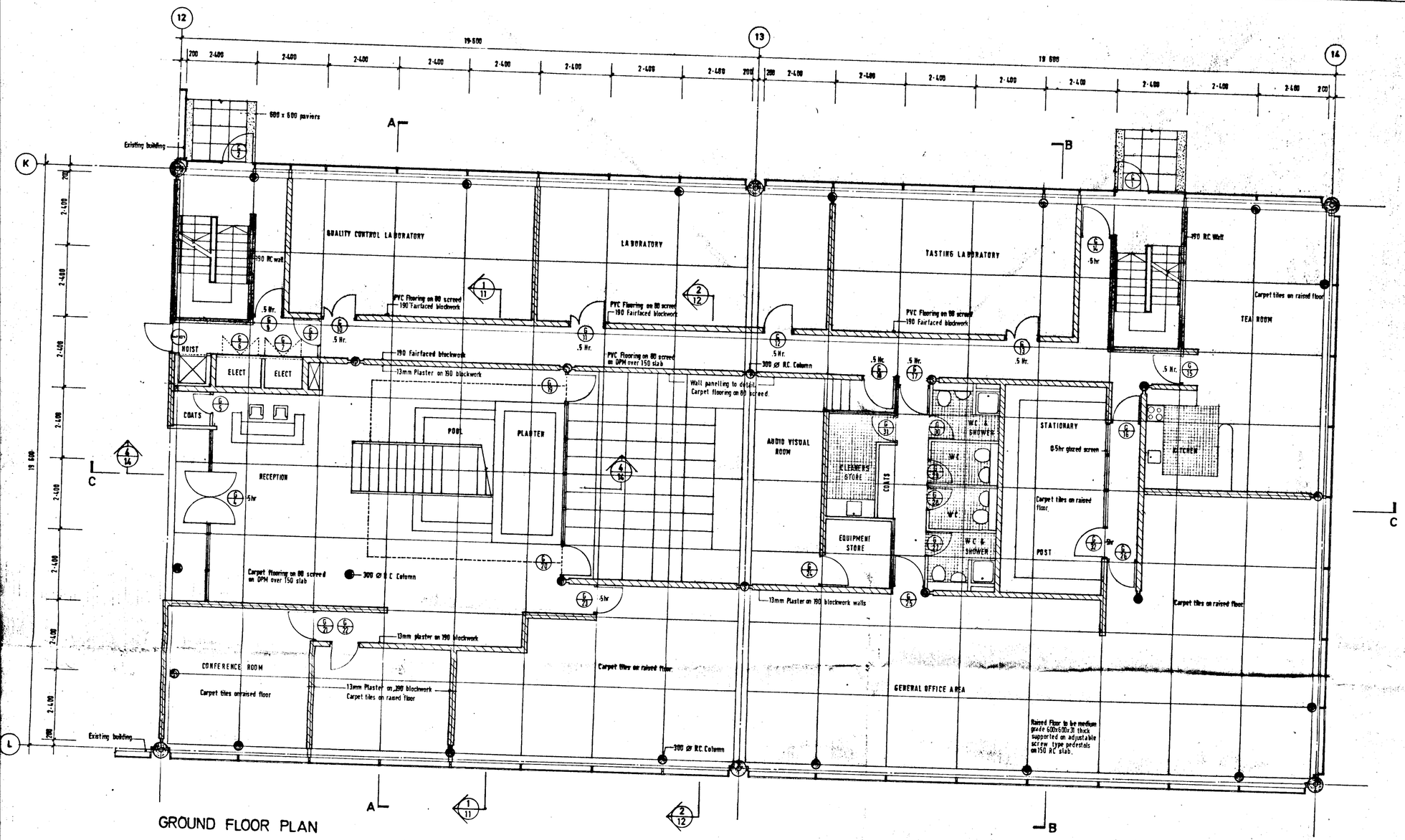

GROUND FLOOR PLAN

CLIENT GILBEYS OF IRELAND (MANUF) LTD.	JOB NEW OFFICE BUILDING	JOB Nº	9 0 7 1
SITE NANGOR RD, CLONDALKIN.	POSITION	DRG Nº	0 4
DRAWING GROUND FLOOR PLAN	SCALE 1:75	REVISION	DATE JULY 1991

/	/	/F
/	/	/E
/	/	/D
/	/	/C
/	/	/B
/	/	/A

Scott Tallon Walker Architects 19 Merrion Square Dublin 2 telephone 760621 fax 613300

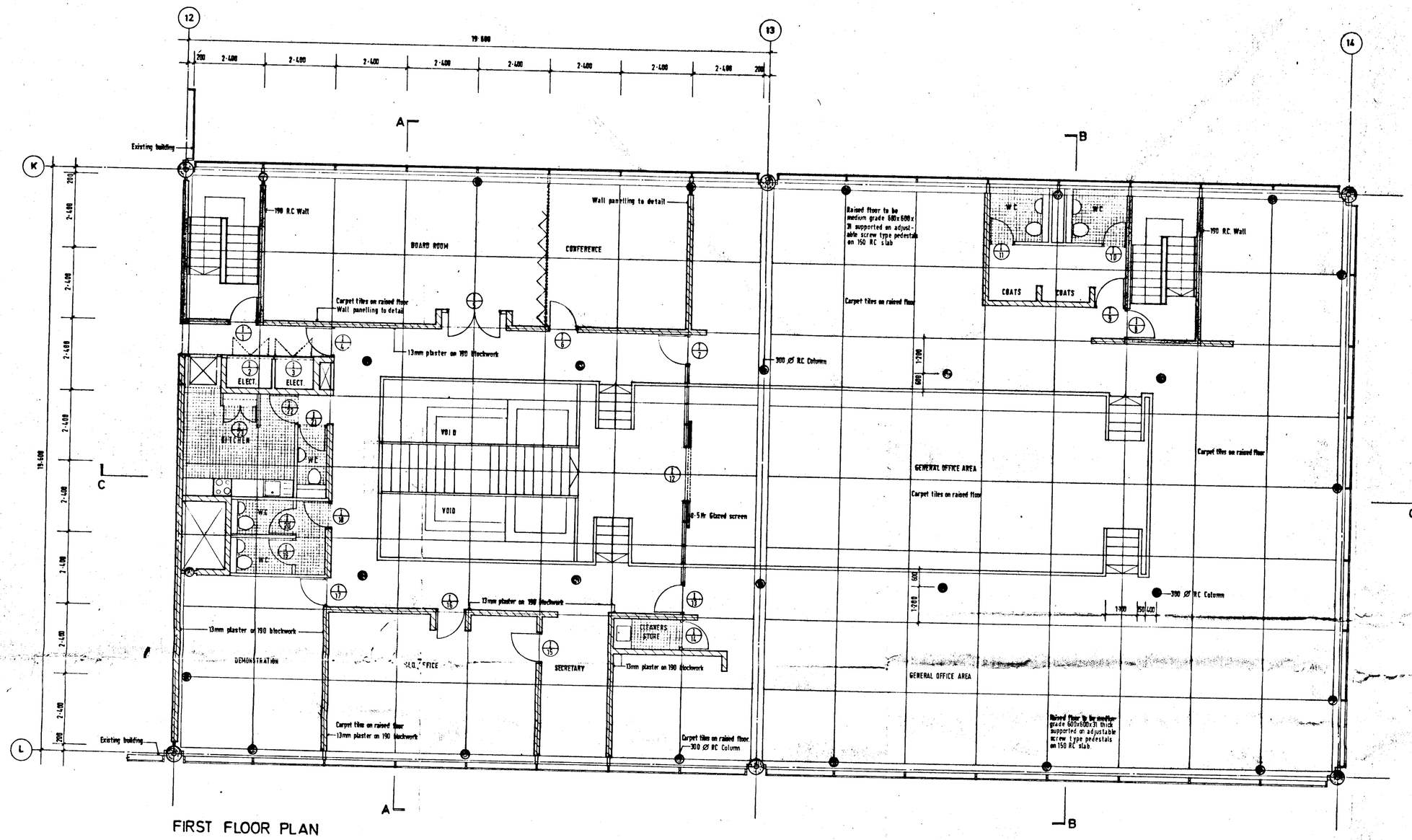

FIRST FLOOR PLAN

/ / /F	CLIENT GILBEYS OF IRELAND (MANUF) LTD.	JOB NEW OFFICE BUILDING	JOB Nº 9071
/ / /E	SITE NANGOR RD, CLONDALKIN	POSITION	DRG Nº 05
/ / /D	DRAWING FIRST FLOOR PLAN	SCALE 1:75	REVISION
/ / /C			DATE JULY 1991
/ / /B			
/ / /A			

Scot Tallon Walker Architects 19 Merrion Square Dublin 2 telephone 760621 fax 613300

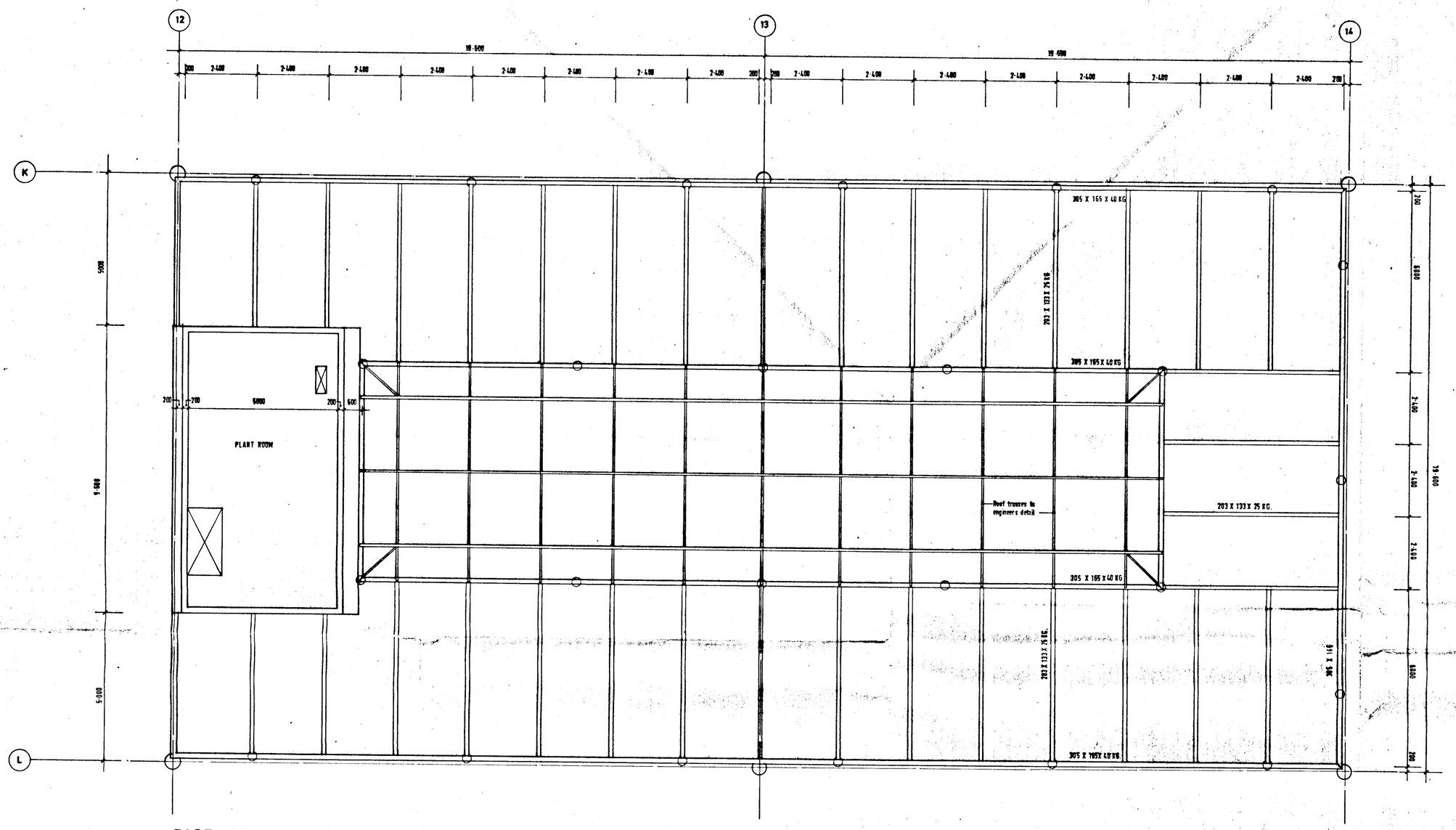

ROOF STEEL PLAN

CLIENT GILBEYS OF IRELAND (MANUF) LTD	JOB NEW OFFICE BUILDING		JOB No	9	0	7	1		
SITE NANGOR RD, CLONDALKIN	POSITION		DRG No			0	6		
DRAWING ROOF STEEL PLAN		SCALE 1 75	REVISION		DATE JULY		1991		

/ / /F
/ / /E
/ / /D
/ / /C
/ / /B
/ / /A

t Tallon Walker Architects 19 Merrion Square Dublin 2 telephone 760621 fax 613300

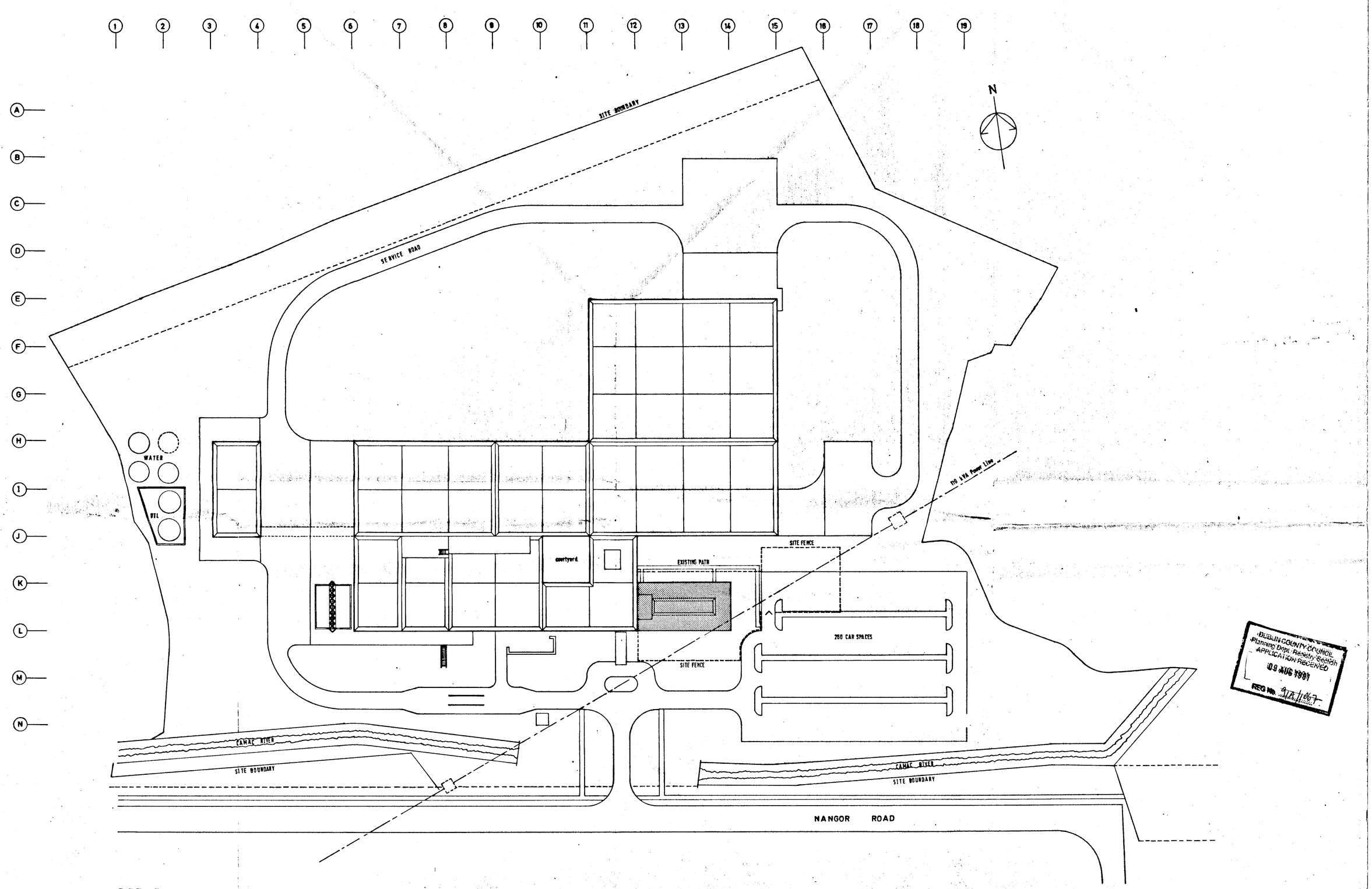

SITE PLAN

CLIENT GILBEYS OF IRELAND (MANUF.) LTD.	JOB NEW OFFICE BUILDING	JOB Nº	9071
SITE NANGOR RD. CLONDALKIN	POSITION	DRG Nº	01
DRAWING SITE PLAN AND WORKING AREA	SCALE 1:750	REVISION	DATE JULY 1991

/ / /F
/ / /E
/ / /D
/ / /C
/ / /B
/ / /A

Scott Tallon Walker Architects 19 Merrion Square Dublin 2 telephone 760621 fax 613300

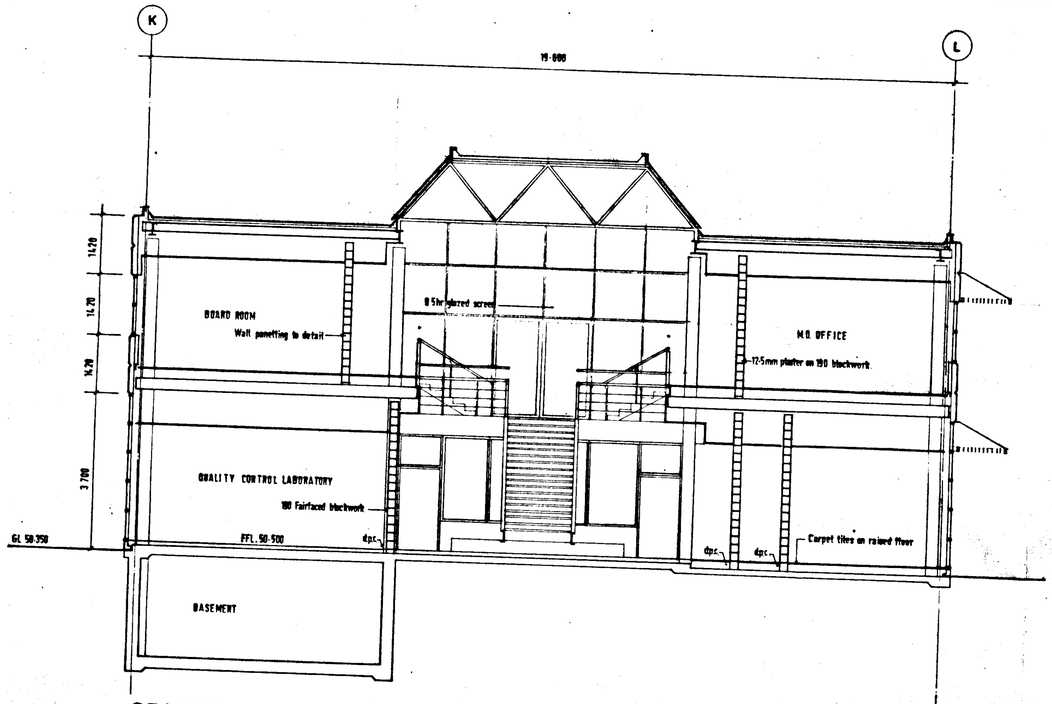

SECTION A A

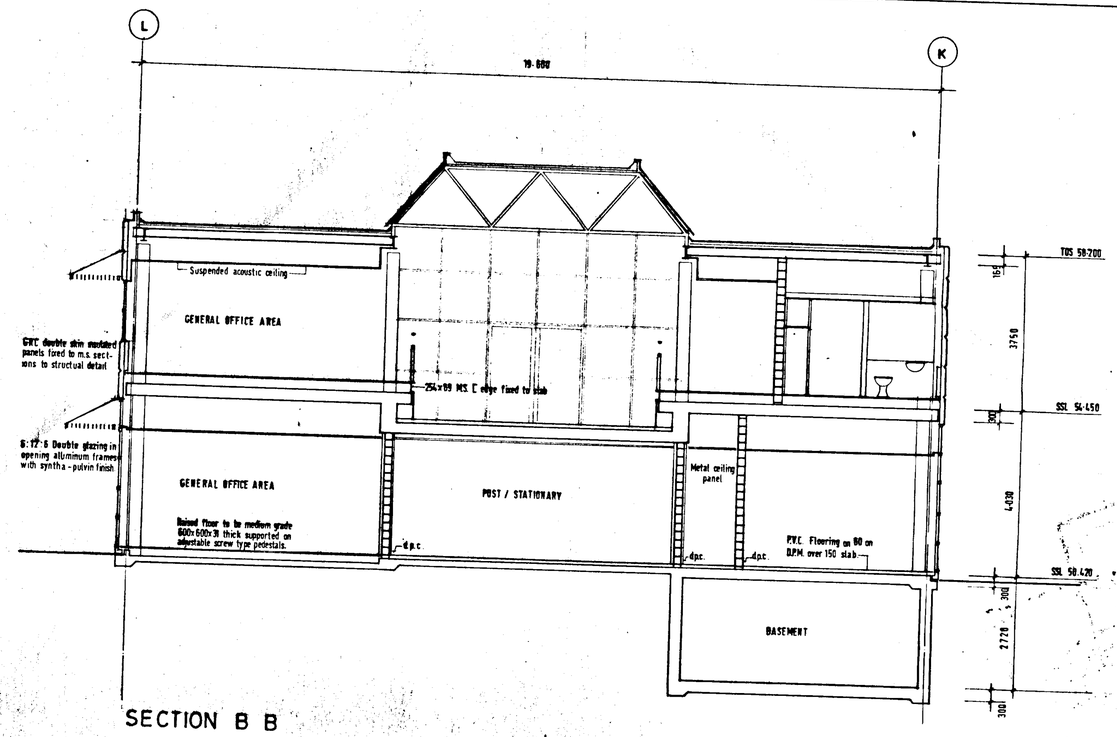

SECTION B B

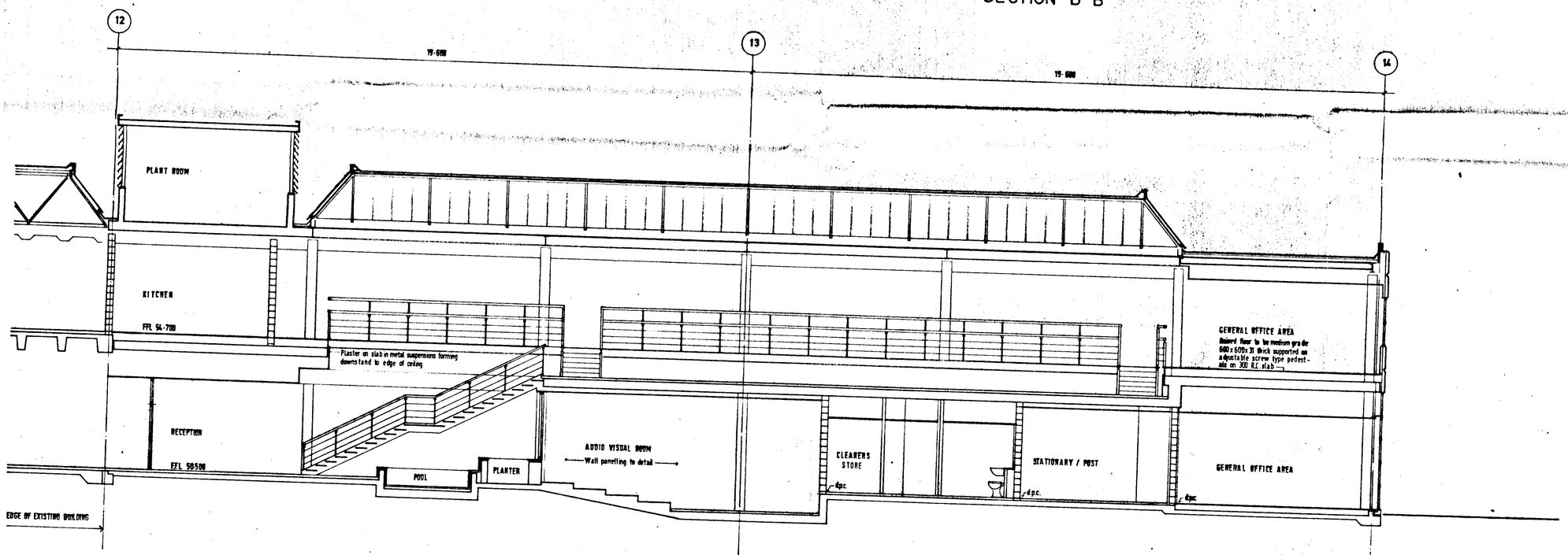

SECTION C-C

/ / F	CLIENT GILBEYS OF IRELAND (MANUF) LTD.	JOB NEW OFFICE BUILDING	JOB Nº 9071
/ / E			
/ / D	SITE NANGOR RD, CLONDALKIN	POSITION	DRG Nº 08
/ / C			
/ / B	DRAWING TYPICAL SECTIONS	SCALE 1:75	REVISION
/ / A			DATE JUNE 1991

t Tallon Walker Architects 19 Merrion Square Dublin 2 telephone 760621 fax 613300

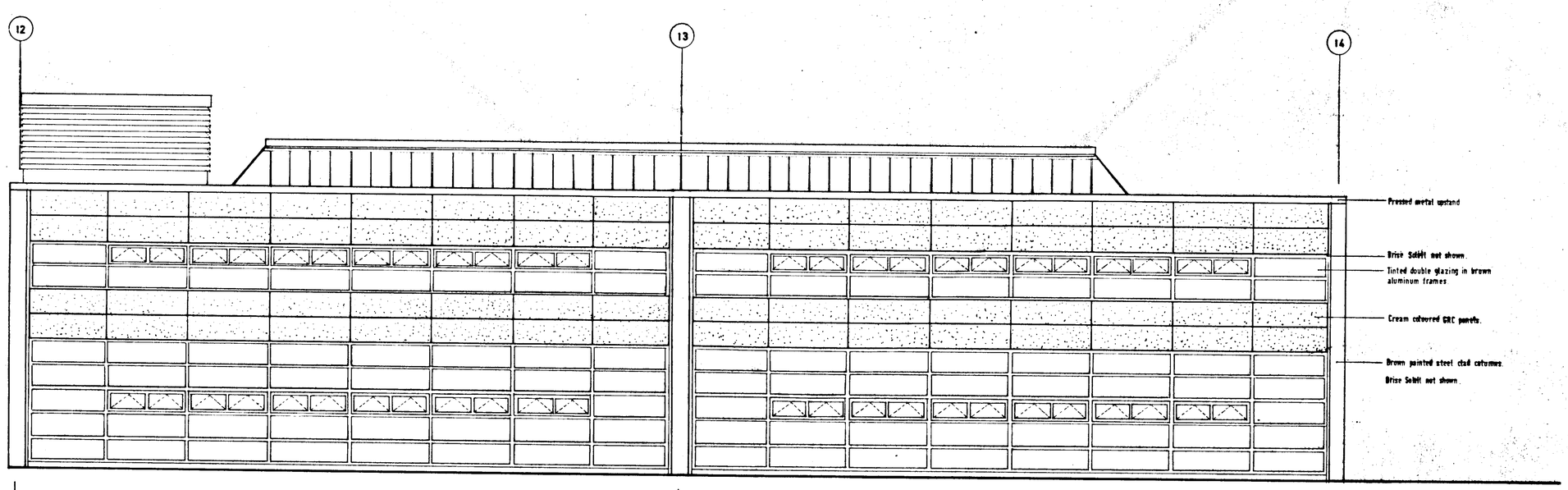

SOUTH ELEVATION

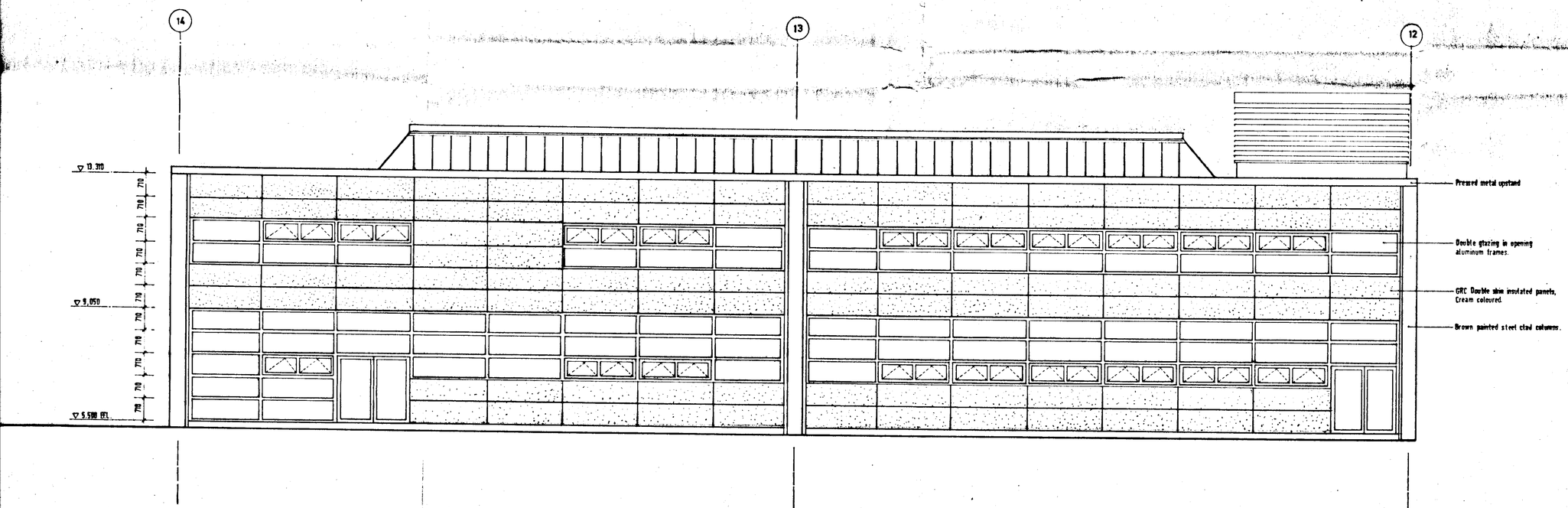

NORTH ELEVATION

/ / F	CLIENT GILBEYS OF IRELAND (MANUF) LTD	JOB NEW OFFICE BUILDING	JOB No	9	0	7	1
/ / E							
/ / D	SITE NANGOR RD. CLONDALKIN	POSITION	DRG No			0	9
/ / C							
/ / B	DRAWING ELEVATIONS	SCALE 1:75	REVISION	DATE JULY 1991			
/ / A							

Scott Tallon Walker Architects 19 Merrion Square Dublin 2 telephone 760621 fax 613300

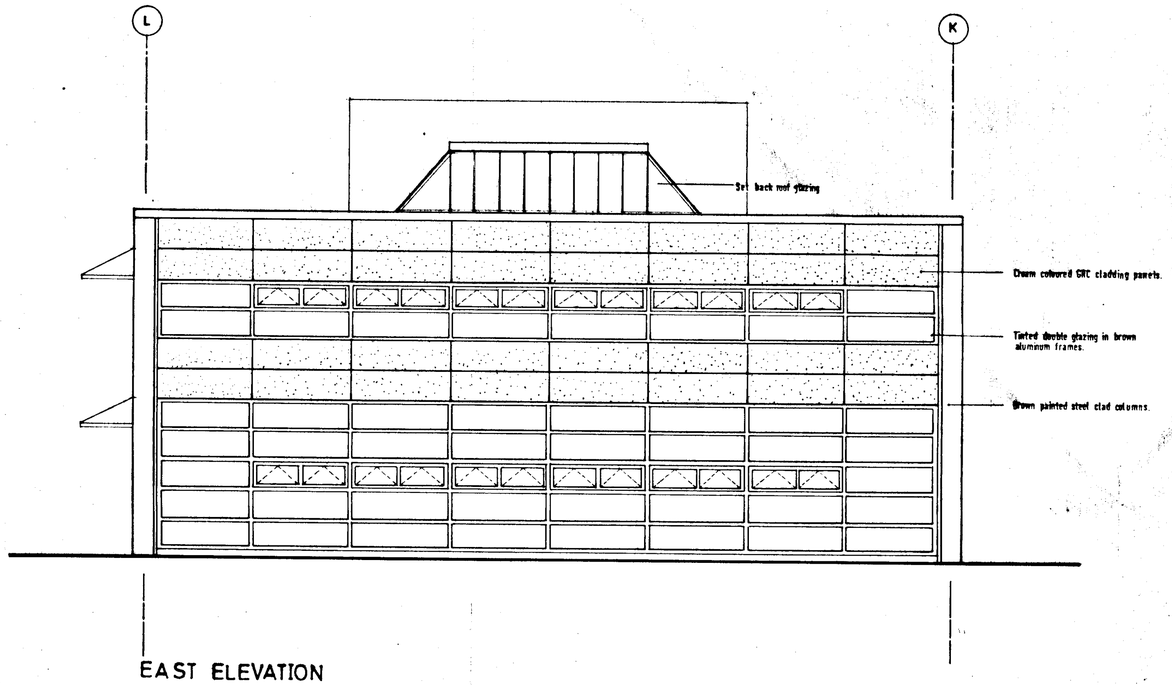

EAST ELEVATION

/ / /F	CLIENT GILBEYS OF IRELAND (MANUF) LTD.	JOB NEW OFFICE BULDING	JOB Nº	9	0	7	1
/ / /E	SITE MANGOR RD. CLONDAL.	POSITION	DRG Nº			1	0
/ / /D							
/ / /C							
/ / /B							
/ / /A	DRAWING ELEVATION	SCALE 1:100	REVISION	DATE JULY 1991			

Scott Tallon Walker Architects 19 Merrion Square Dublin 2 telephone 760621 fax 613300

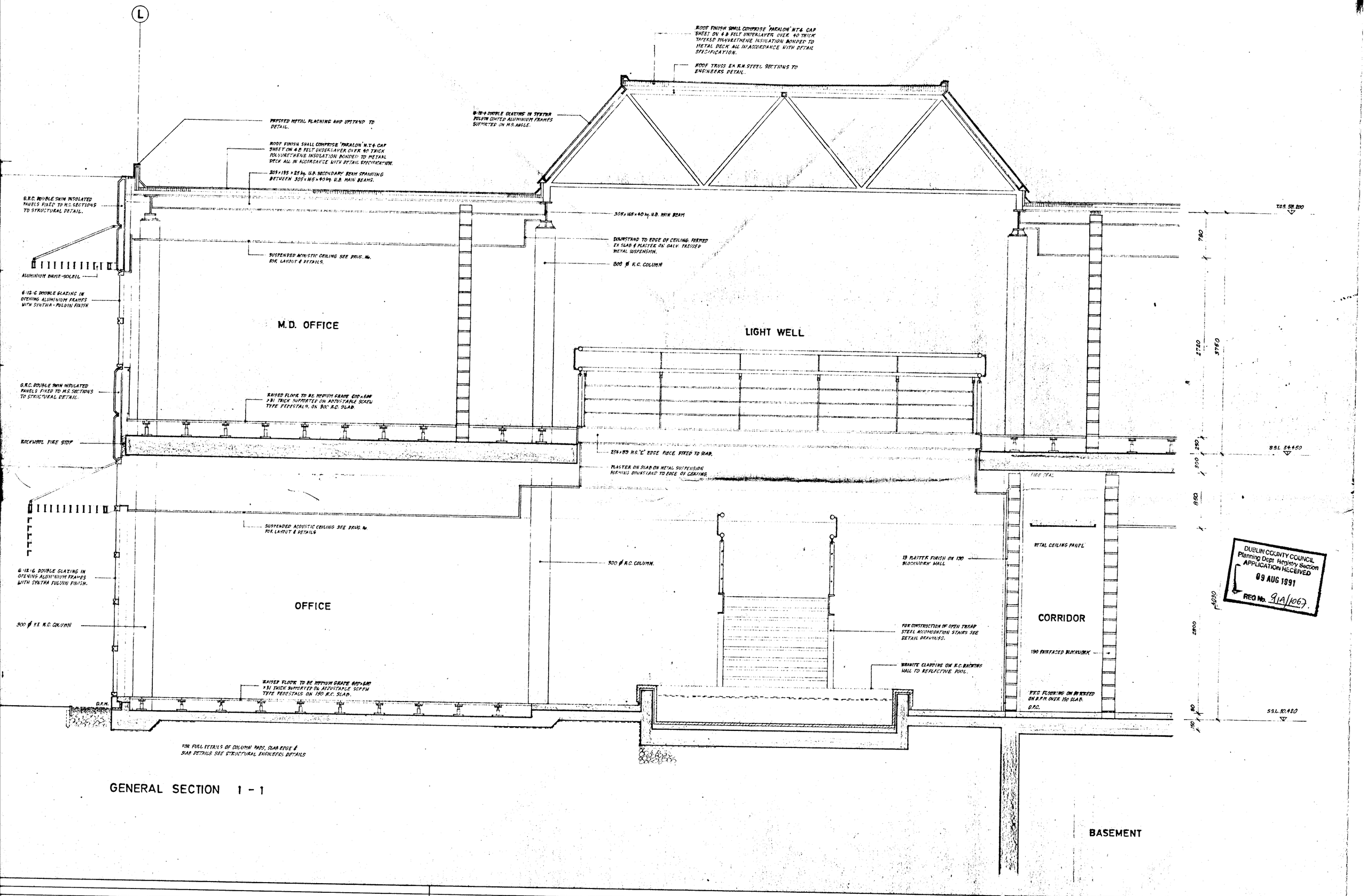

GENERAL SECTION 1 - 1

/ / 1F		
/ / 1E		
/ / 1D		
/ / 1C		
/ / 1B		
/ / 1A		

CLIENT GILBEYS OF IRELAND (MANUF) LTD.	JOB NEW OFFICE BUILDING	JOB Nº	9 0 7 1
SITE NANGOR RD. CLONDALKIN	POSITION	DRG Nº	1 1
DRAWING GENERAL SECTION	SCALE 1:25	REVISION	DATE JULY 1991

Scott Tallon Walker Architects 19 Merrion Square Dublin 2 telephone 760621 fax 613300

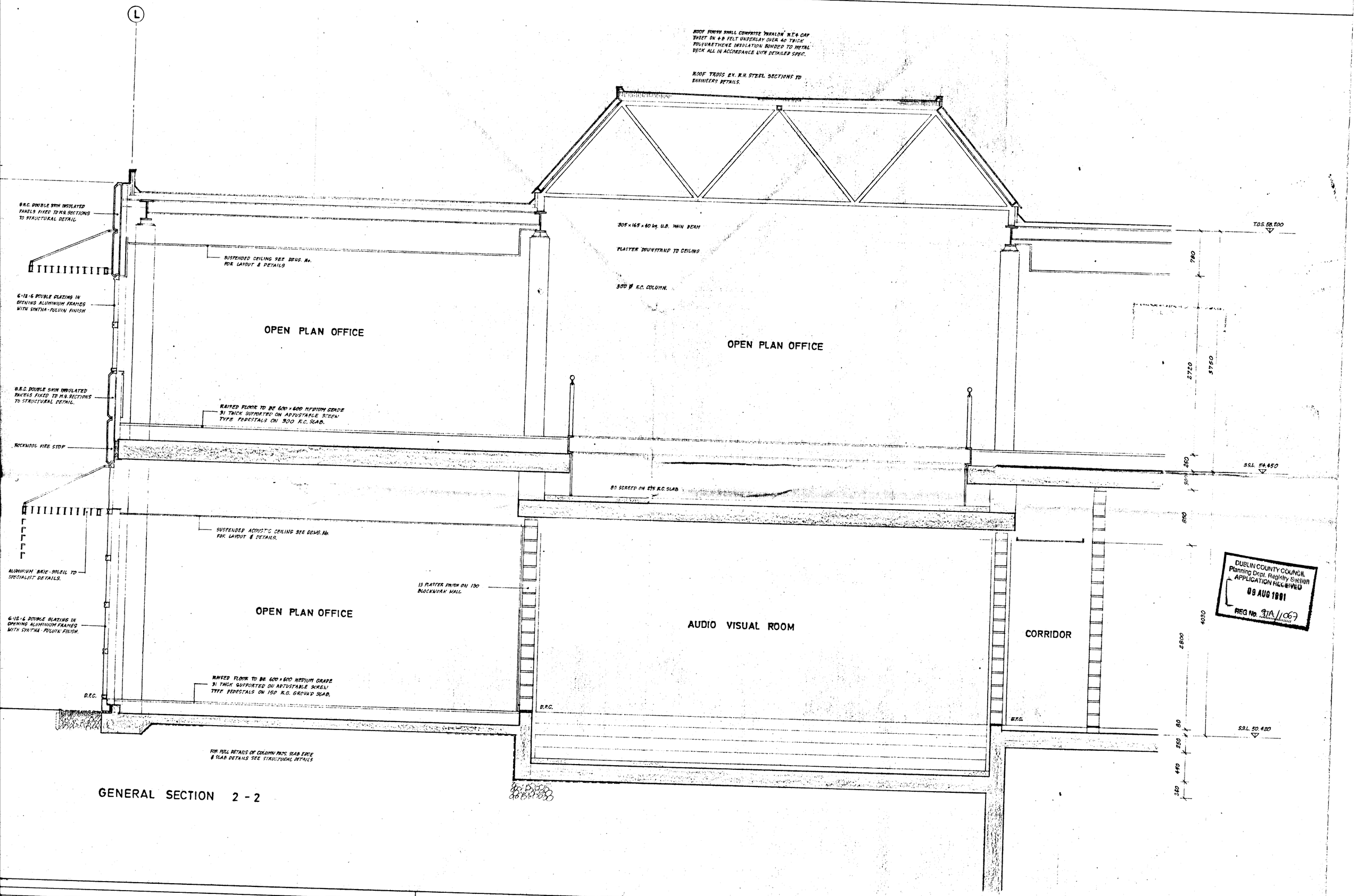

GENERAL SECTION 2 - 2

/ / 1F	CLIENT GILBEYS OF IRELAND (MANUF) LTD.	JOB NEW OFFICE BUILDING
/ / 1E	SITE NANGOR RD. CLONDALKIN	POSITION
/ / 1D	DRAWING GENERAL SECTION	SCALE 1:25
/ / 1C		
/ / 1B		
/ / 1A		

JOB No	9071
DRG No	12
REVISION	
DATE	JULY 1991

ott Tallon Walker Architects 19 Merrion Square Dublin 2 telephone 760621 fax 613300

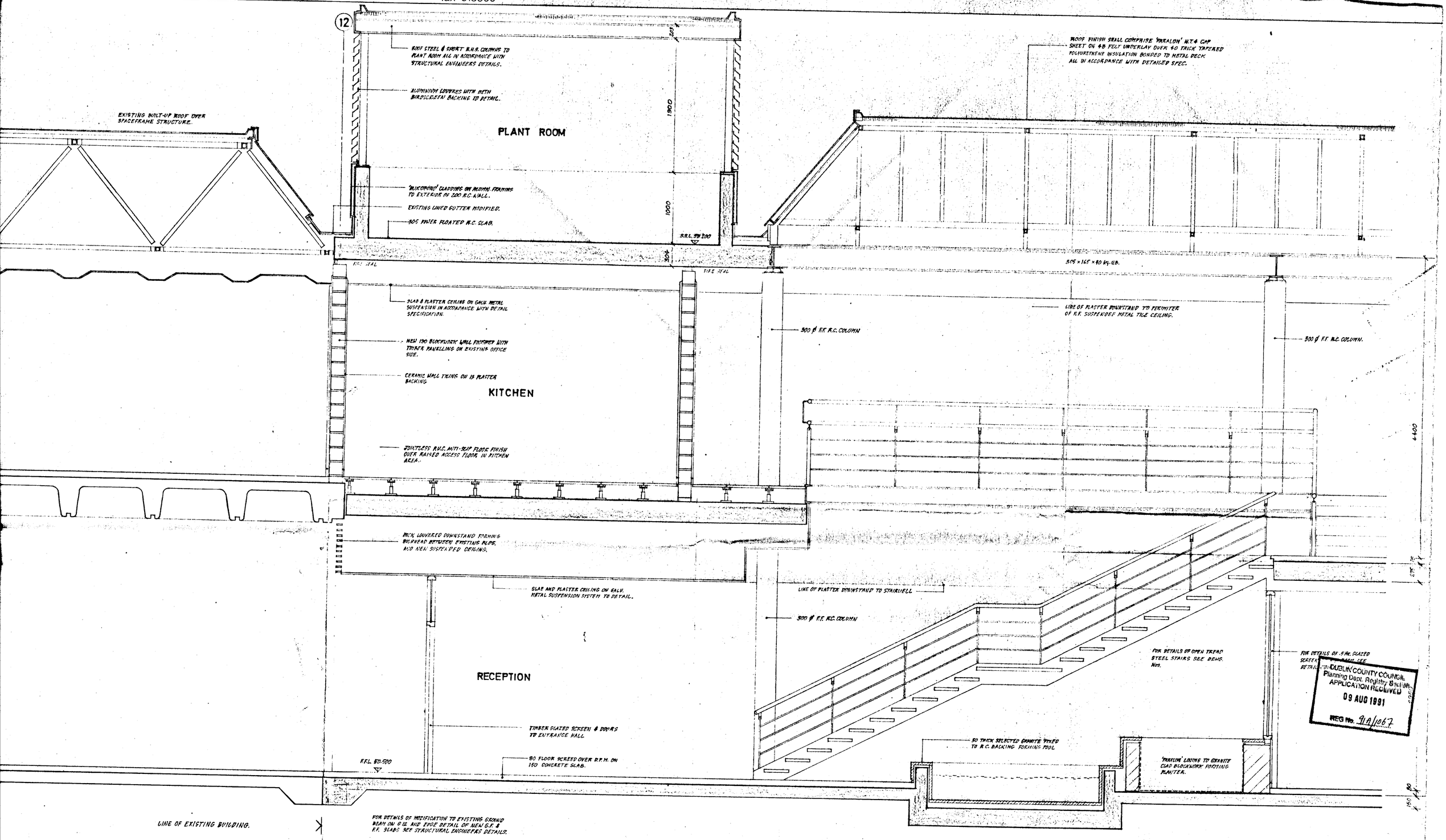

ERAL SECTION 4 - 4

/ /	1F	
/ /	1E	
/ /	1D	
/ /	1C	
/ /	1B	
/ /	1A	

CLIENT GILBEYS OF IRELAND (MANUF) LTD.	JOB NEW OFFICE BUILDING	JOB Nº	9071
SITE NANGOR RD CLONDALKIN	POSITION	DRG Nº	14
DRAWING GENERAL SECTION	SCALE 1:25	REVISION	DATE JULY 1991

Scott Tallon Walker Architects 19 Merrion Square Dublin 2 telephone 760621 fax 613300

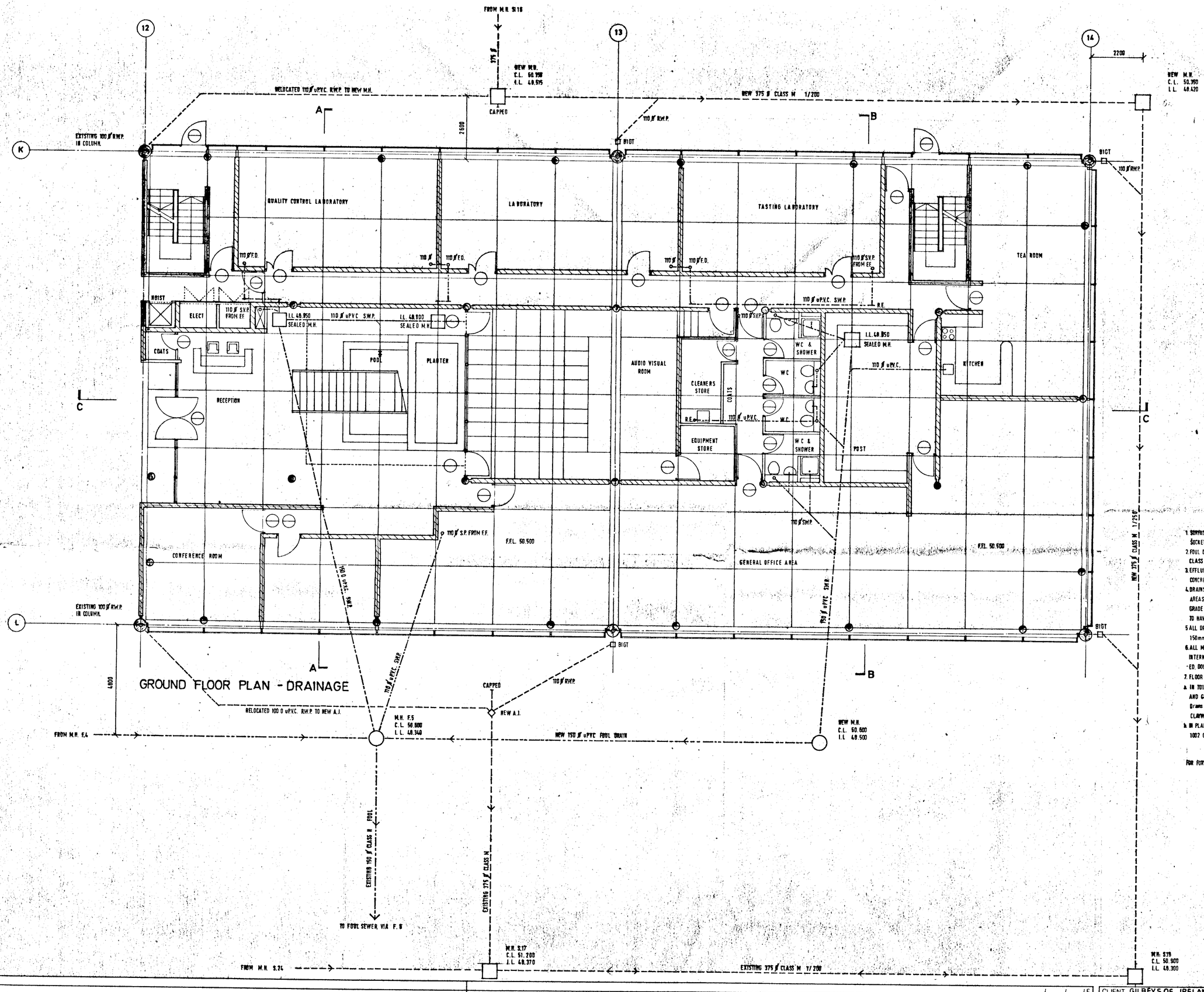

NOTES

1. SURFACE WATER DRAINS TO BE FLEXIBLE JOINTED SPIGOT AND SOCKET CONCRETE CLASS M PIPES.
2. FOUL DRAINS TO BE FLEXIBLE JOINTED ASBESTOS-CEMENT CLASS H PIPES.
3. EFFLUENT DRAINS TO BE uPVC PIPES WITH 150mm GRADE 20 CONCRETE BED AND SURROUND
4. DRAINS WHERE COVER IS LESS THAN 1·2m UNDER PAVED AREAS AND 0·9m UNDER GRASSED AREAS TO HAVE 150mm GRADE 20 CONCRETE BED AND SURROUND OTHERWISE DRAINS TO HAVE 150mm CONCRETE BED AND HAUNCH.
5. ALL DRAINS UNDER BUILDING TO BE uPVC PIPES WITH 150mm GRADE 20 CONCRETE BED AND SURROUND.
6. ALL MANHOLES SHALL BE AS PER ENGINEERS DETAILS. INTERNAL MANHOLES SHALL HAVE INSET TYPE, BRASS FRAMED, DOUBLE SEALED, BOLT DOWN COVERS.
7. FLOOR DRAINS.
   a. IN TOILET AREAS - HARMER AVS 75 WITH CLAMPING COLLAR AND GRATING ASSEMBLY. (Hamer Ref A C 150/LC. These Drains shall be fitted to HEPWORTH CODE 169 with CODE 14.0A CLAYWARE P TRAPS.
   b. IN PLANTROOM : HEPWORTH SUPERSLEVE CODE 169 WITH CODE 1002 GRATING.

FOR FURTHER DETAILS REFER TO ARCHITECTS DRAWINGS NOS 2, 3 & 19.

/ / 1F	CLIENT GILBEYS OF IRELAND (MANUF) LTD.	JOB NEW OFFICE BUILDING	JOB Nº 9071
/ / 1E	SITE NANGOR RD, CLONDALKIN.	POSITION	DRG Nº 18
/ / 1D	DRAWING GROUND FLOOR PLAN - DRAINAGE	SCALE 1:75	REVISION
/ / 1C			DATE JULY 1991
/ / 1B			
/ / 1A			

Scott Tallon Walker Architects 19 Merrion Square Dublin 2 telephone 760621 fax 613300

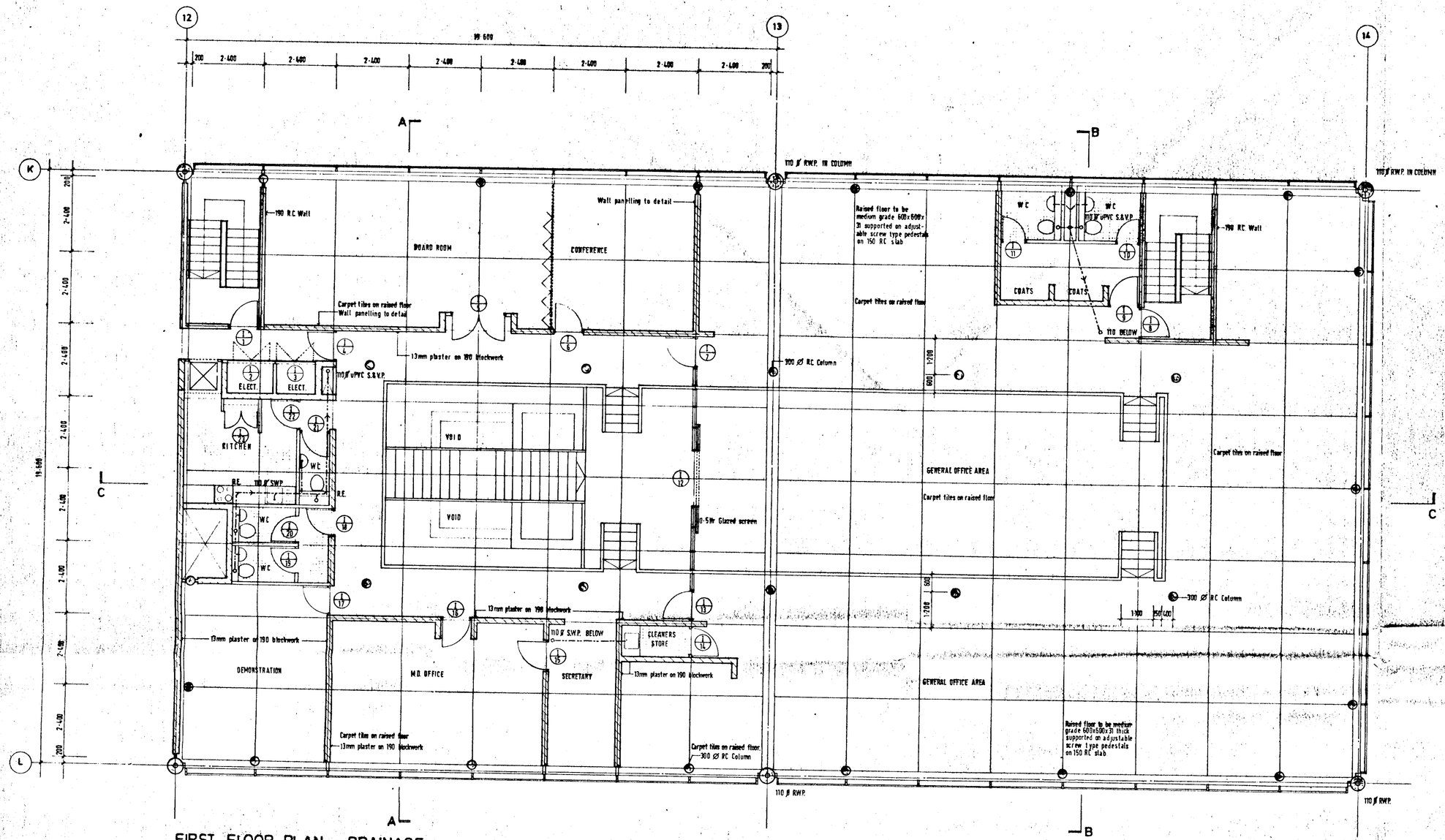

FIRST FLOOR PLAN - DRAINAGE

/ / 1F	CLIENT GILBEYS OF IRELAND (MANUF) LTD.	JOB NEW OFFICE BUILDING	JOB Nº 9071
/ / 1E	SITE NANGOR RD, CLONDALKIN	POSITION	DRG Nº 19
/ / 1D	DRAWING FIRST FLOOR PLAN - DRAINAGE	SCALE 1:75	REVISION
/ / 1C			DATE JULY 1991
/ / 1B			
/ / 1A			

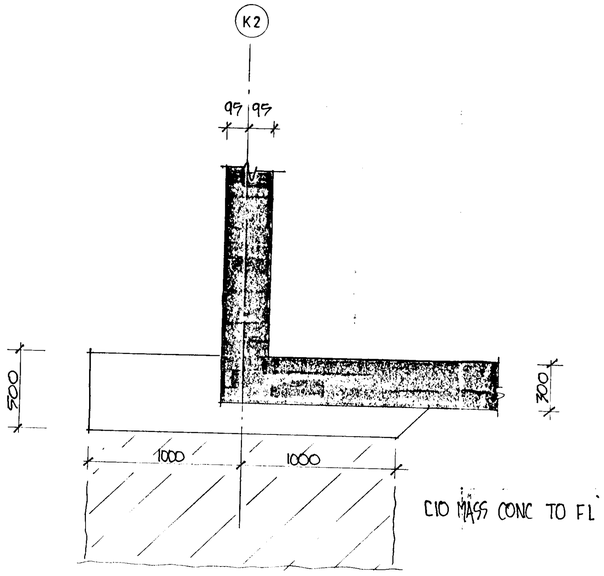

SECTION 1-1 1:10

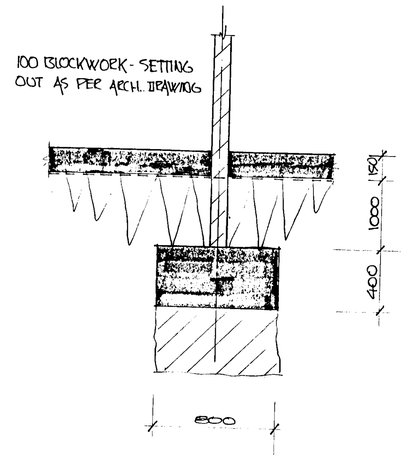

SECTION 2-2

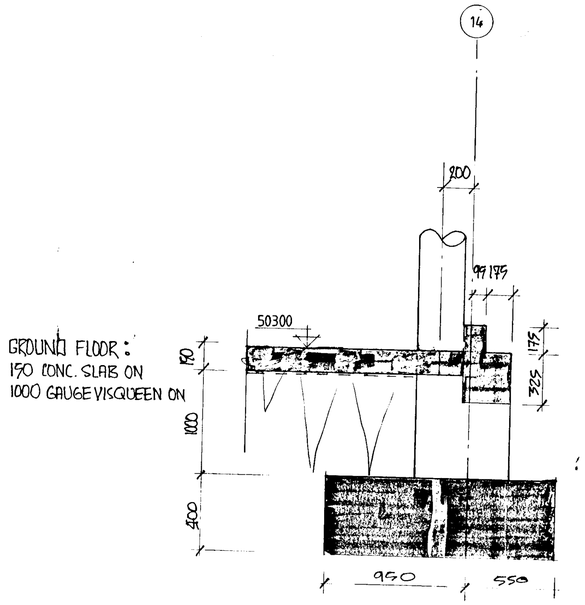

GROUND FLOOR:
150 CONC. SLAB ON
1000 GAUGE VISQUEEN ON

SECTION 3-3

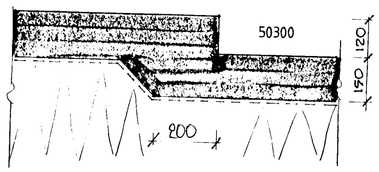

SECTION 4-4 1:10

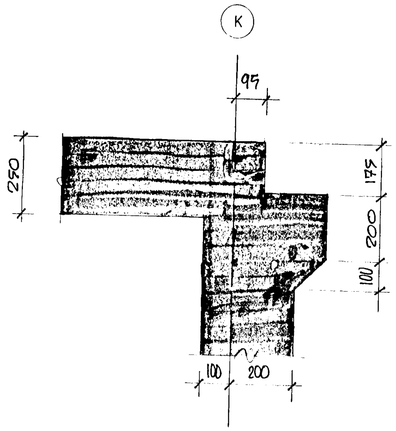

SECTION 5-5 1:10

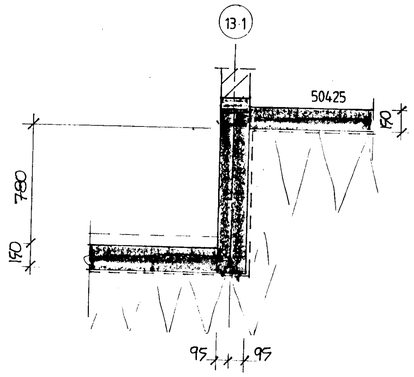

SECTION 6-6 1:20

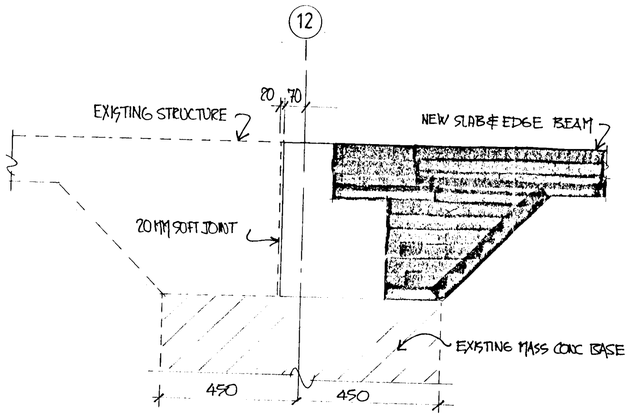

SECTION 7-7 1:10

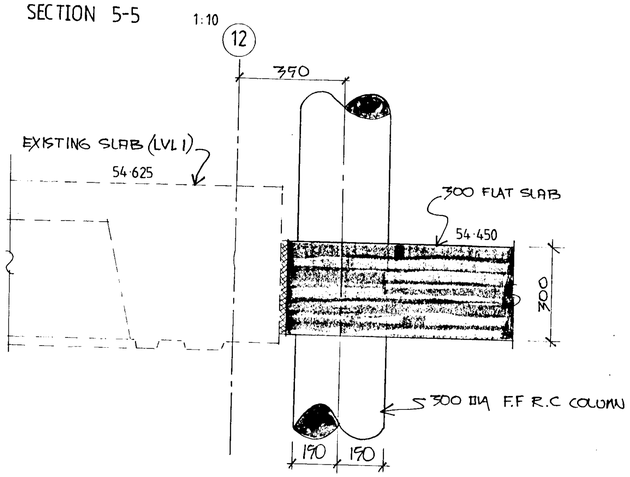

SECTION 8-8 1:10

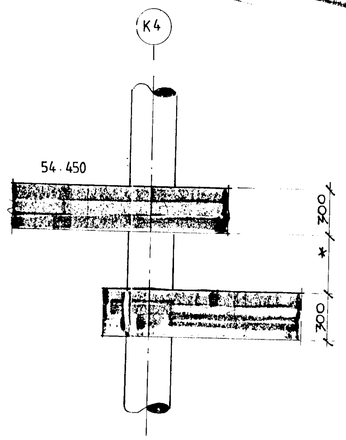

SECTION 9-9 1:10

Mark	Date	By	Rev

Client

Drawing Status: BYELAW

Job Title: GILBEYS IRELAND LTD
NEW OFFICE BUILDING

Drawing Title: SECTIONS

Ove Arup & Partners Ireland
Consulting Engineers
Dublin : Cork : Limerick

Scales

Drn	Date	Chkd	Passed

Job No	Drawing No	Rev
D545/10	S/L/301	P1

ARUP

A1

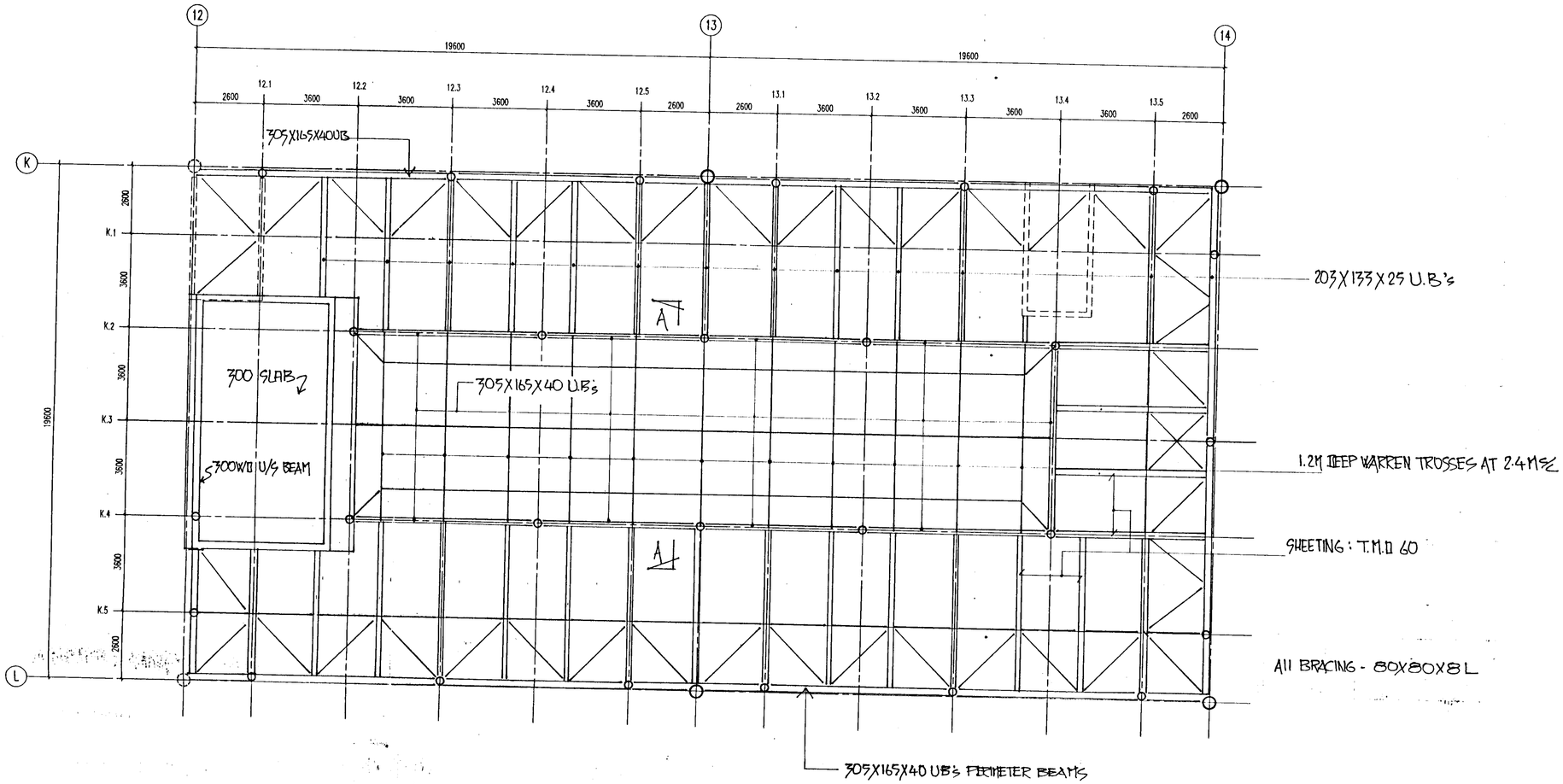

ROOF PLAN

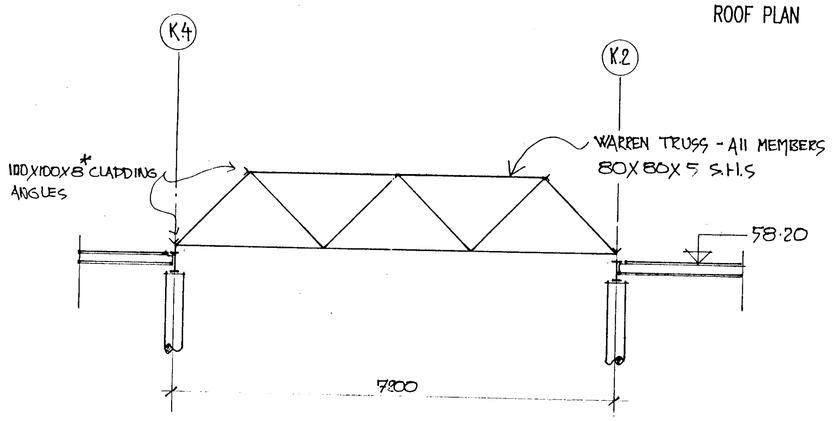

SECTION A-A

NOTES

1. THIS DRAWING TO BE READ IN CONJUNCTION WITH ALL RELEVANT ARCHITECTS, SERVICES ENGINEERS AND OVE ARUP & PARTNERS IRELAND DRAWINGS AND THE SPECIFICATION.

2. REINFORCED CONCRETE TO BE GRADE C35 UNLESS NOTED OTHERWISE.

3. MASS CONCRETE TO BE GRADE C10.

4. FOR DETAILS OF RAINWATER PIPES REFER TO THE ARCHITECTS DRAWINGS.

5. ALL LEVELS ARE STRUCTURAL UNLESS NOTED OTHERWISE.

6. FOR LOCATION AND DETAILS OF MINOR SERVICE OPENINGS LESS THAN 300 x 300 REFER TO ARCHITECTS AND SERVICES ENGINEERS DRAWINGS.

7. FOR CONCRETE FINISHES REFER TO THE SPECIFICATION.

Mark	Date	By	Revision
P1	27 07 91	GS	ISSUED FOR BYELAW APPROVAL

Drawing Status: BYELAW

DUBLIN COUNTY COUNCIL
Planning Dept. Registry Section
APPLICATION RECEIVED
09 AUG 1991
REG. No. 91A/1067

Job Title: GILBEYS IRELAND LTD NEW OFFICE BUILDING

Drawing Title: GENERAL ARRANGEMENT ROOF

ARUP
Ove Arup & Partners Ireland
10 Wellington Road Dublin 4
Tel 01-683112 Fax 01-683189
DUBLIN CORK LIMERICK

Scales 1:100
Drn. GS Date 07/91 Chd. Passed

Job No.	Drawing No.	Rev.
D545/10	S/L/201	P1

A1

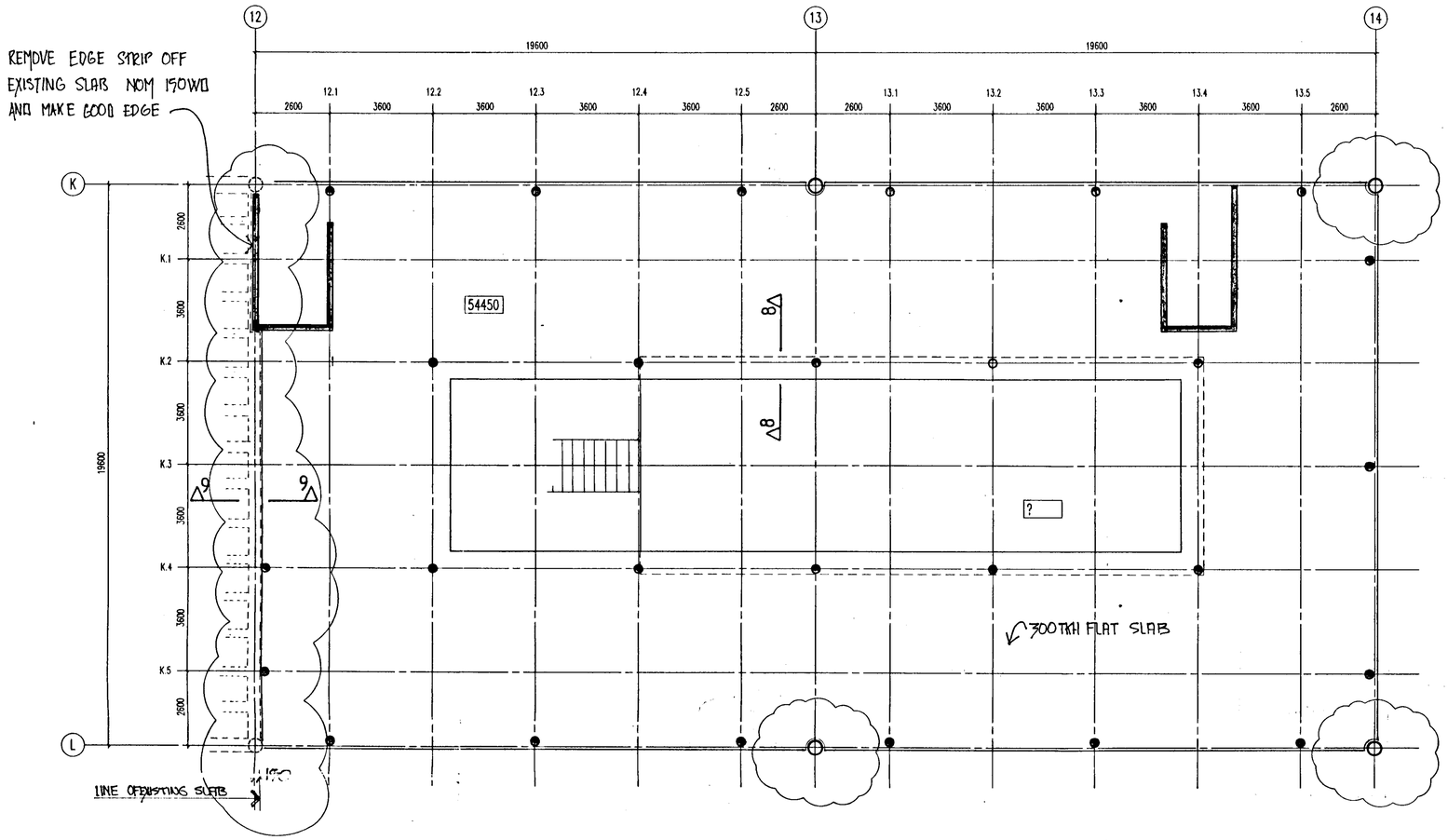

FIRST FLOOR PLAN

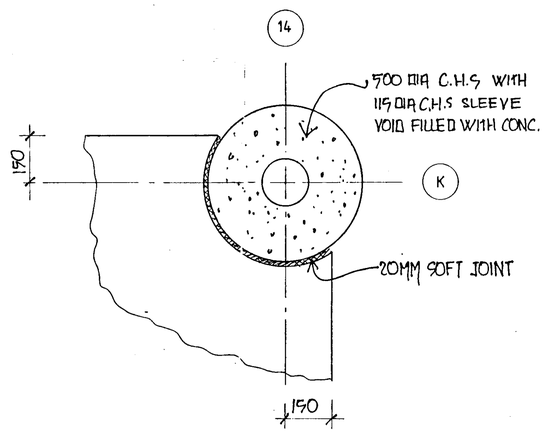

NOTES

1. THIS DRAWING TO BE READ IN CONJUNCTION WITH ALL RELEVANT ARCHITECTS, SERVICES ENGINEERS AND OVE ARUP & PARTNERS IRELAND DRAWINGS AND THE SPECIFICATION.

2. REINFORCED CONCRETE TO BE GRADE C35 UNLESS NOTED OTHERWISE.

3. MASS CONCRETE TO BE GRADE C10.

4. FOR DETAILS OF RAINWATER PIPES REFER TO THE ARCHITECTS DRAWINGS.

5. ALL LEVELS ARE STRUCTURAL UNLESS NOTED OTHERWISE.

6. FOR LOCATION AND DETAILS OF MINOR SERVICE OPENINGS LESS THAN 300 x 300 REFER TO ARCHITECTS AND SERVICES ENGINEERS DRAWINGS.

7. FOR CONCRETE FINISHES REFER TO THE SPECIFICATION.

Mark	Date	By	Revision
P1	27 07 91	GS	ISSUED FOR BYELAW APPROVAL

Drawing Status
BYELAW

Job Title
GILBEYS IRELAND LTD
NEW OFFICE BUILDING

Drawing Title
GENERAL ARRANGEMENT
FIRST FLOOR

ARUP
Ove Arup & Partners Ireland
10 Wellington Road Dublin 4
Tel 01-683112 Fax 01-683169
DUBLIN CORK LIMERICK

Scales 1:100
Drn. GS Date 07/91 Chd Passed

Job No.	Drawing No.	Rev.
D545/10	S/L/101	P1

A1

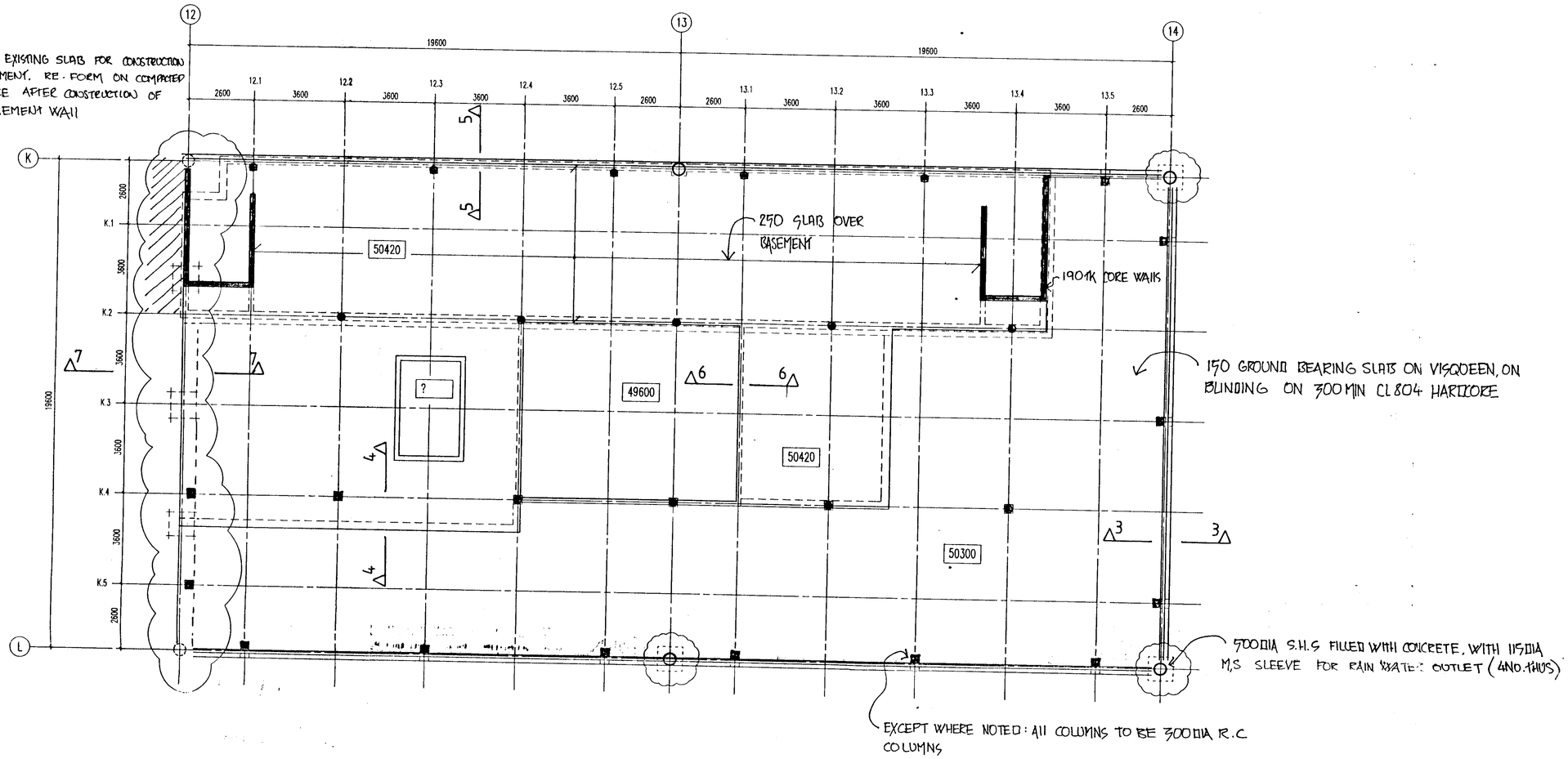

GROUND FLOOR PLAN

NOTES

1. THIS DRAWING TO BE READ IN CONJUNCTION WITH ALL RELEVANT ARCHITECTS, SERVICES ENGINEERS AND OVE ARUP & PARTNERS IRELAND DRAWINGS AND THE SPECIFICATION.
2. REINFORCED CONCRETE TO BE GRADE C35 UNLESS NOTED OTHERWISE.
3. MASS CONCRETE TO BE GRADE C16.
4. FOR DETAILS OF RAINWATER PIPES REFER TO THE ARCHITECTS DRAWINGS.
5. ALL LEVELS ARE STRUCTURAL UNLESS NOTED OTHERWISE.
6. FOR LOCATION AND DETAILS OF MINOR SERVICE OPENINGS LESS THAN 300 x 300 REFER TO ARCHITECTS AND SERVICES ENGINEERS DRAWINGS.
7. FOR CONCRETE FINISHES REFER TO THE SPECIFICATION.

Mark	Date	By	Revision
P1	27 07 91	GS	ISSUED FOR BYELAW APPROVAL

Drawing Status
BYELAW

Job Title
GILBEYS IRELAND LTD
NEW OFFICE BUILDING

Drawing Title
GENERAL ARRANGEMENT
GROUND FLOOR

ARUP
Ove Arup & Partners Ireland
10 Wellington Road Dublin 4
Tel 01-683112 Fax 01-683169
DUBLIN CORK LIMERICK

Scales 1:100
Drn. GS Date 07/91 Chd Passed

Job No	Drawing No	Rev
D545/10	S/L/G01	P1

A1

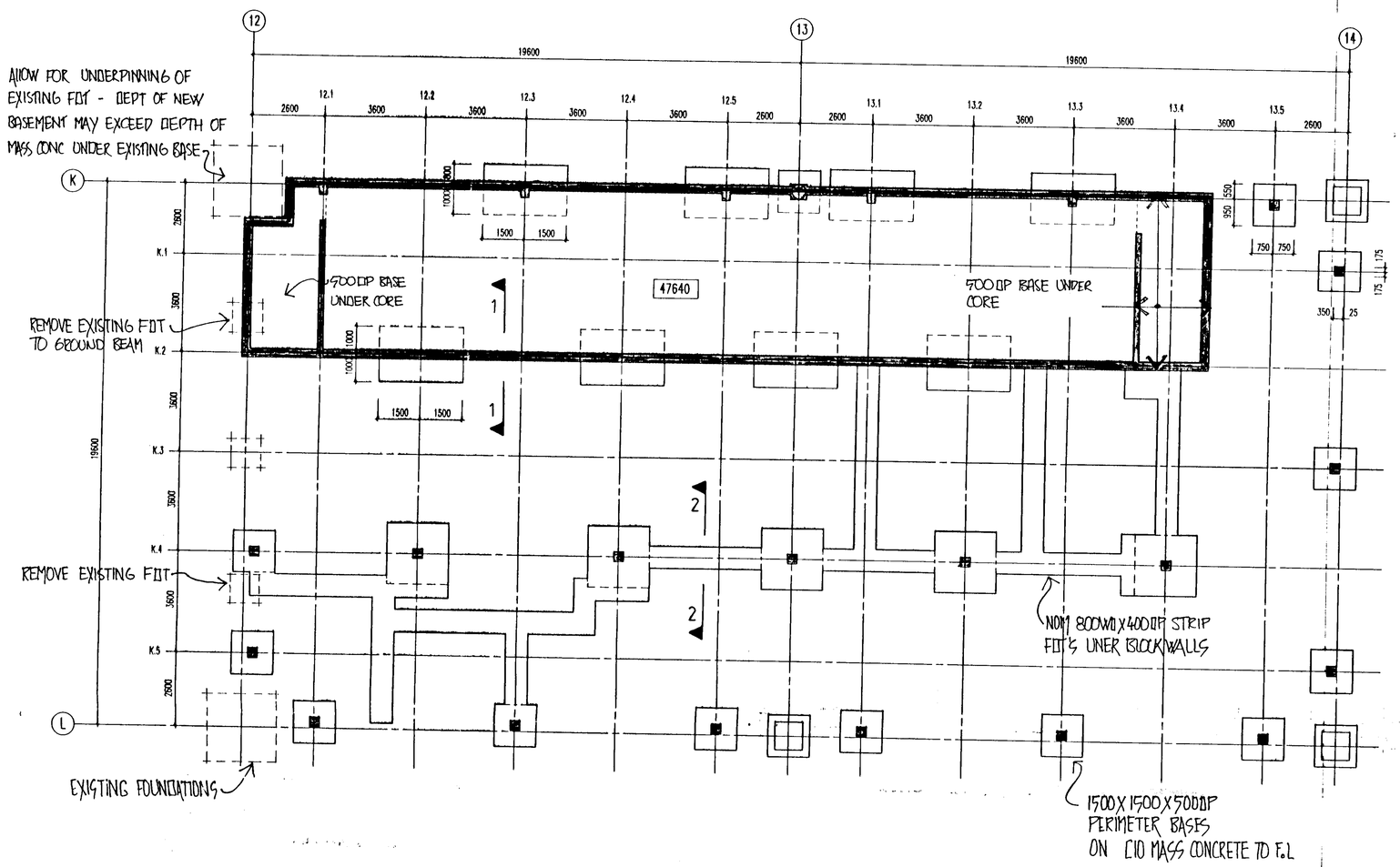

FOUNDATION / BASEMENT PLAN

NOTES

1. THIS DRAWING TO BE READ IN CONJUNCTION WITH ALL RELEVANT ARCHITECTS, SERVICES ENGINEERS AND OVE ARUP & PARTNERS IRELAND DRAWINGS AND THE SPECIFICATION.

2. REINFORCED CONCRETE TO BE GRADE C35 UNLESS NOTED OTHERWISE.

3. MASS CONCRETE TO BE GRADE C10.

4. FOR DETAILS OF RAINWATER PIPES REFER TO THE ARCHITECTS DRAWINGS.

5. ALL LEVELS ARE STRUCTURAL UNLESS NOTED OTHERWISE.

6. FOR LOCATION AND DETAILS OF MINOR SERVICE OPENINGS LESS THAN 300 x 300 REFER TO ARCHITECTS AND SERVICES ENGINEERS DRAWINGS.

7. FOR CONCRETE FINISHES REFER TO THE SPECIFICATION.

Mark	Date	By	Revision
P1	27 07 91	GS	ISSUED FOR BYELAW APPROVAL

Drawing Status: BYELAW

Job Title: GILBEYS IRELAND LTD NEW OFFICE BUILDING

Drawing Title: GENERAL ARRANGEMENT BASEMENT / FOUNDATIONS

ARUP
Ove Arup & Partners Ireland
10 Wellington Road Dublin 4
Tel 01-683112 Fax 01-683189
DUBLIN CORK LIMERICK

Scales 1:100
Drn. GS Date 07/91 Chd. Passed

Job No.	Drawing No.	Rev.
D545/10	S/L/B01	P1

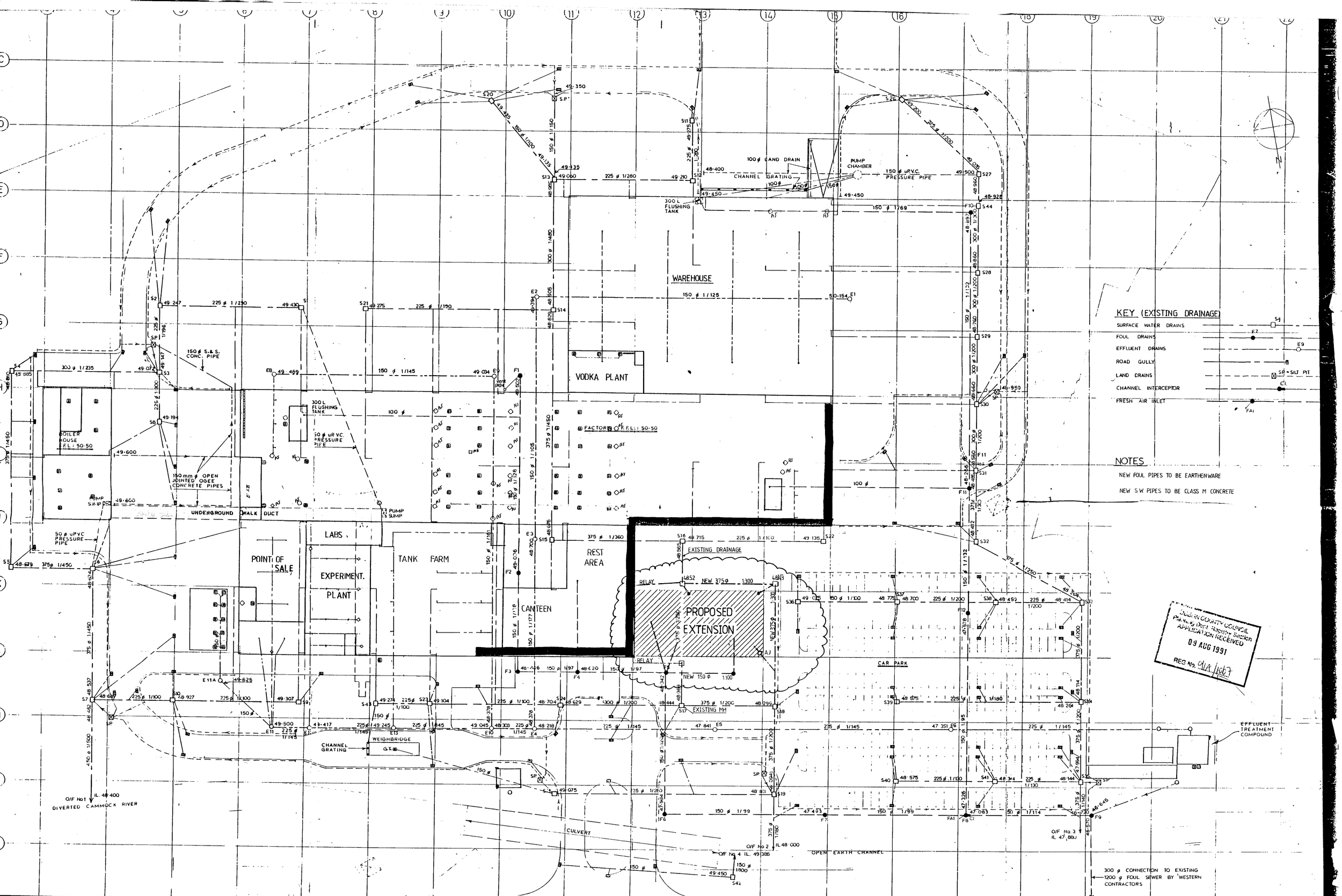

1 Concrete to be grade
2 Maximum aggregate size to be
3 Unless noted cover for steel
4 For location see Drg Nos
5 Bending schedule pages
6 AP Alternately Placed NF Near Face FF Far Face
AS Alternately Staggered AR Alternately Reversed
T Top B Bottom

NOTE: THIS DRAWING IS SCHEMATIC FOR INTERNAL DRAINS

GILBEYS OF IRELAND

NANGOR ROAD EXTENSION

OVE ARUP & PARTNERS

Job No	Drg No	Rev
D545/10	D1	

Scale 1:500

Drawn C.T. Date 08/91 Chd Passed